EGPL-G1S4

M.2 2242 to single isolated GbE LAN horizontal module

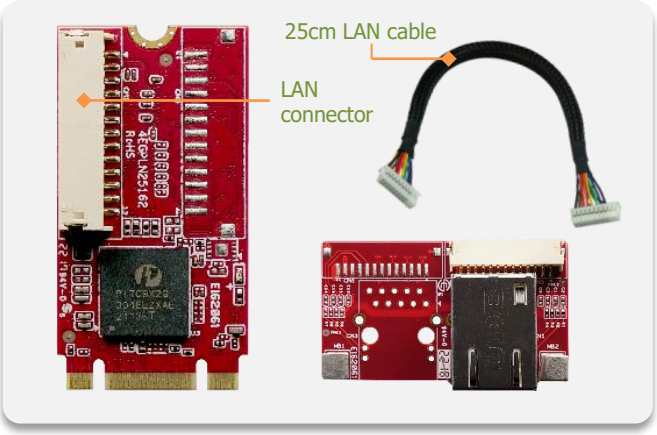

Features

- Intel i225 chip. Single isolated GbE LAN ports
- Complies with EN61000-4-5 2kV surge protection
- Complies with IEC 60950-1:2005 + A1: 2009 + A2:2013 2kV HiPOT protection
- Complies with EN61000-4-2 (ESD) Air-15kV, Contact-8kV
- Flexible daughter board with cable to fit into different system
- Industrial temperature -40 ºC to 85 ºC
- 30μ" golden finger, 3-year warranty
- Industrial design, manufactured in Innodisk Taiwan

Mechanical Drawing

Main Board

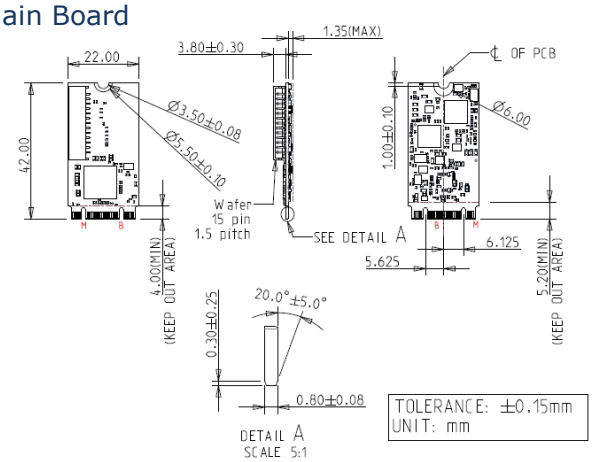

Daughter Board

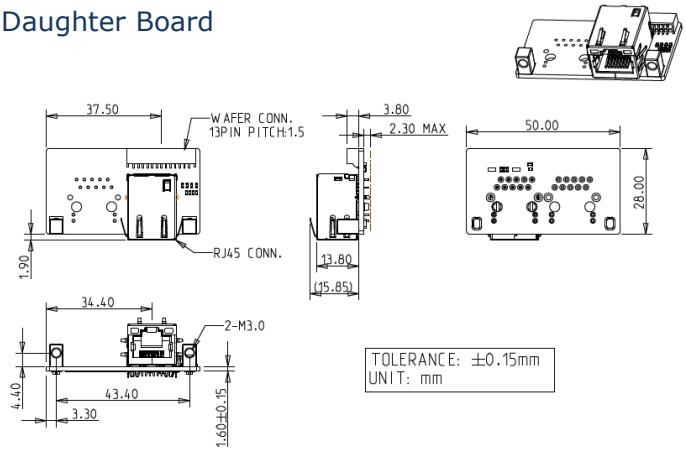

Specifications

Form-Factor	M.2 2242 B-M
Input I/F	PCI Express 2.1 x 2
Output I/F	Single GbE LAN
Output Connector	RJ45 x 1
Power Consumption	MAX: 1.801W (3.3V, 546mA)
Dimension (WxLxH)	Main board: 22 x 42 x 5.95 mm Daughter board: 50 x 28 x 19.75mm
Temperature	Operation: STD: 0˚C ~ +70˚C. W/T: -40˚C ~ +85˚C Storage: -55˚C ~ +95˚C
Environment	Vibration: 5G @7~2000Hz, Shock: 50G @ 0.5ms
Notes	Please download driver from Intel official website. Windows: 10 (64bit) Linux (igc): kernel 5.x version
Limitations	*Linux kernel rebuild is needed (modify igc driver) if version < 5.15 *Not recommend used in VMware ESXi due to High Latency *Not support Intel vPro

Order information

EGPL-G1S4-C1 (Mounting hole, Standard Temp.)
EGPL-G1S4-W1 (Mounting hole, Wide Temp.)
M.2 2242 to single isolated GbE LAN horizontal module

Headquarters (Taiwan)
5F., No.237, Sec. 1, Datong Rd., Xizhi Dist., New Taipei City 221, Taiwan

Tel: +886-2-7703-3000
Email: sales@innodisk.com

Branch Offices:
USA
usasales@innodisk.com
+1-510-770-9421
Europe
eusales@innodisk.com
+31-40-3045-400
Japan
jpsales@innodisk.com
+81-3-6667-0161
China
sales_cn@innodisk.com
+86-755-21673689

www.innodisk.com

© 2022 Innodisk Corporation. All right reserved. Specifications are subject to change without prior notice.

April 7, 2023