Subracks – europacPRO

Overview 6.2

Introduction 6.4

europacPRO ... 6.6

Subracks for mobile railway applications 6.70

europacPRO for industrial applications 6.86

europacPRO for rugged applications 6.92

Accessories 6.17

europacPRO for industrial applications

- Over and above the europacPRO standard range additional kits for wall mounting or for installation of supply modules to DIN 43880

europacPRO for rugged applications

- Over and above the europacPRO standard range additional shock and vibration properties for up to 25 g in accordance with the standards:
  MIL 167, IEC 61587 DL 3, MIL 810 G, MIL 901

europacPRO accessories

- Extensive range of accessories for europacPRO products
- Side panels, horizontal rails, guide rails, cover plates, front/rear covers, handles and shielding components
- Interior assembly: combined mounting 6 or 2 x 3 U, horizontal board mounting, mounting plates, panel mounting, central locking, telescopic slides, divider plates, air deflectors, 19" module support and extensive fixing material kit

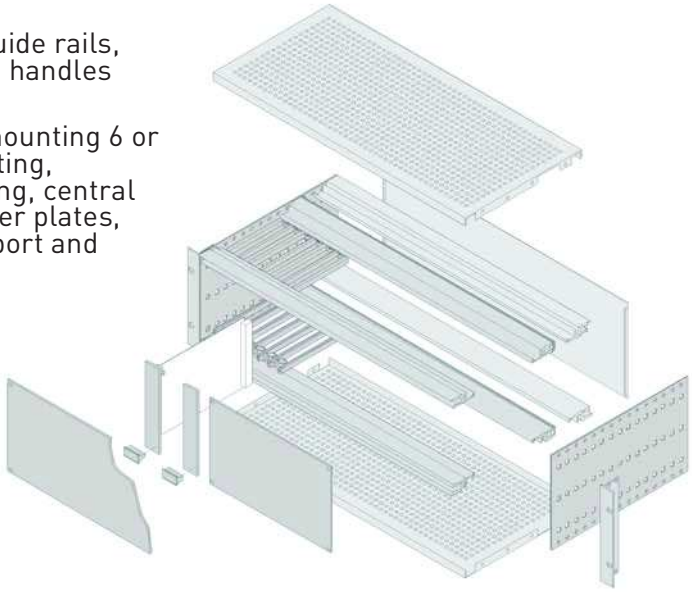

36112002 (01494031 06112002 06112001 06112020)

Subracks – *europacPRO* Introduction

Platform-based standard solutions for individual requirements

Practical technology without time-consuming assembly. The modular europacPRO product platform allows a wide range of possible applications with only a few components. The intelligent design of all components results in remarkably simple and fast management in assembly and components.

Two ways of reaching your desired product:

- Kits
- Individual configuration

Simple assembly with europacPRO kits:

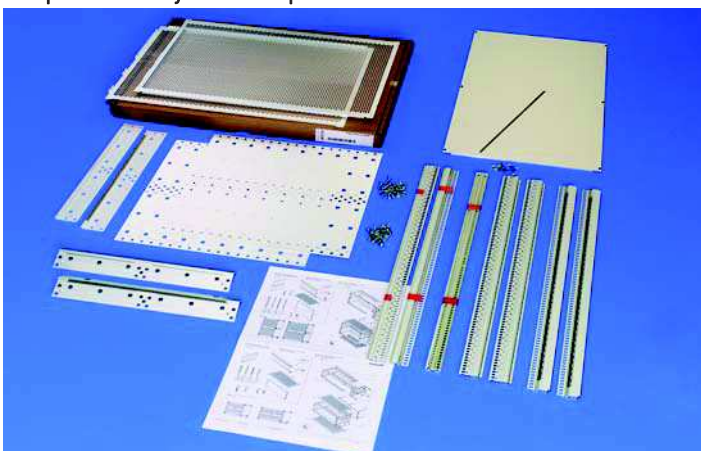

06107001

Delivered in space-saving flat packs. The threaded inserts or EMC gasket (depending on selected kit) are already pre-mounted on the horizontal rail.

Individual configuration:

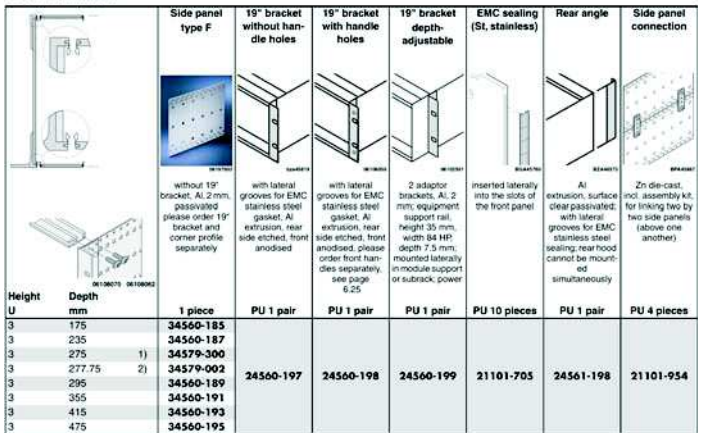

Height U	Depth mm		Side panel type F	19" bracket without handle holes	19" bracket with handle holes	19" bracket depth-adjustable	EMC sealing (St, stainless)	Rear angle	Side panel connection
			without 19" bracket, Al, 2 mm, passivated please order 19" bracket and corner profile separately	with lateral grooves for EMC stainless steel gasket, Al extrusion, rear side etched, front anodised	with lateral grooves for EMC stainless steel gasket, Al extrusion, rear side etched, front anodised, please order front handles separately, see page 6.25	2 adaptor brackets, Al, 2 mm; equipment support rail, height 35 mm, width 84 HP, depth 7.5 mm; mounted laterally in module support or subrack; power	inserted laterally into the slots of the front panel	Al extrusion, surface clear passivated; with lateral grooves for EMC stainless steel sealing; rear hood cannot be mounted simultaneously	Zn die-cast, incl. assembly kit, for linking two by two side panels (above one another)
			1 piece	PU 1 pair	PU 1 pair	PU 1 pair	PU 10 pieces	PU 1 pair	PU 4 pieces
3	175		34560-185	24560-197	24560-198	24560-199	21101-705	24561-198	21101-954
3	235		34560-187						
3	275	1)	34579-300						
3	277.75	2)	34579-002						
3	295		34560-189						
3	355		34560-191						
3	415		34560-193						
3	475		34560-195						

06109052

You design your subrack as you wish, then receive it fully assembled via our **ServicePLUS assembly service** (even for orders of just one). We can also carry out individual modifications and cut-outs; and when time is short can do so very fast via ServicePLUS express.

Horizontal rails and side panels for different load-carrying classes

06197007

Light

06197008

Heavy

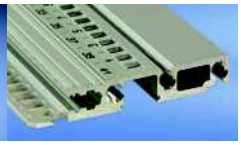

06112004

Rugged

Horizontal rails are available for three load classes:

- "light" (load up to approx. 7.5 kg)
- "heavy" (load > 7.5 kg)
- "rugged" (load 15 kg)

06197002

Type Light

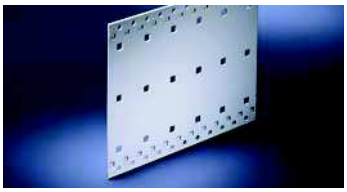

06197003

Type Flexible

06197004

Type Heavy

06112021

Type Rugged

Side panels for 4 different load classes

- Light: low-cost version with built-in 19" mounting bracket
- Flexible: with separate, depth-adjustable 19" mounting bracket
- Heavy: with integrated, tox-cold welded 19" mounting bracket, e.g. for shock and vibration environments up to 5 g
- Rugged: with integrated, tox-cold welded 19" mounting bracket and higher material thicknesses for extreme mechanical stresses, e.g. for increased shock and vibration environments up to 25 g
- The combination of the 3 horizontal rail variants with the 4 types of side panel results in an almost unlimited variety of potential applications for various market requirements

Subracks – europacPRO Introduction

Guide rails from plastic and aluminium profiles

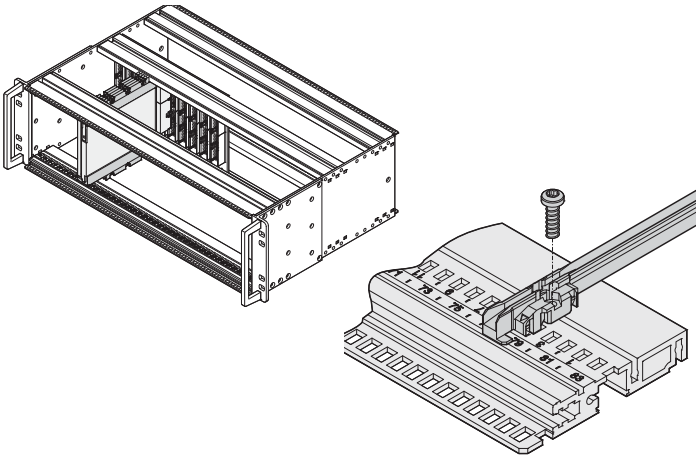

06112052 06111059

Guide rails form the interface between the subrack mechanics and the assemblies (boards, plug-in units, frame type plug-in units, drive unit modules, ...).

Robust snap-in fixings on the plastic rails assure a secure grip, even when exposed to vibrations. In the case of H and R-type horizontal rails the guide rails can also be bolted on. For extreme stresses, guide rails in aluminium extrusion are used.

To ensure that the wrong subassembly is not inserted into the wrong space we offer a mechanical coding to IEEE 1101.10/11 and IEC 60297-3-103.

The continuous numbering on the horizontal rail (from 28 HP) and the markings on the guide rails facilitate quick fitting in the correct position.

We offer the appropriate adaptors for accommodating VPX or CompactPCI boards with strengthening frame or conduction-cooled assemblies (CCA) installed in a subrack.

Electromagnetic shielding and ESD

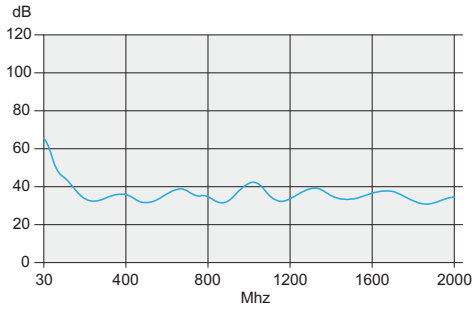

06108081

The product platform europacPRO offers a variety of off-the-shelf solutions to assure electromagnetic compatibility (EMC) and to avoid electrostatic discharge (ESD).

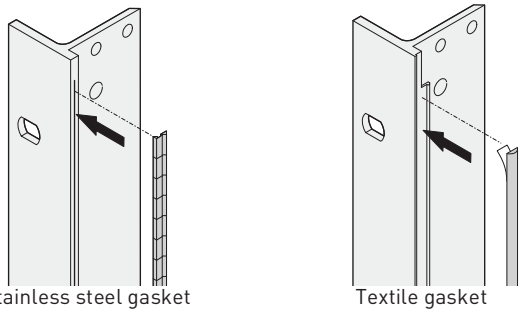

Stainless steel gasket Textile gasket

06108074 06108073

Two shielding concepts

It can't be more secure!

Two types of shielding concepts to front/rear of the subrack allow the use all Schroff frontpanels.

The shielding at the front of the subrack is by means of stainless steel or textile EMC gaskets.

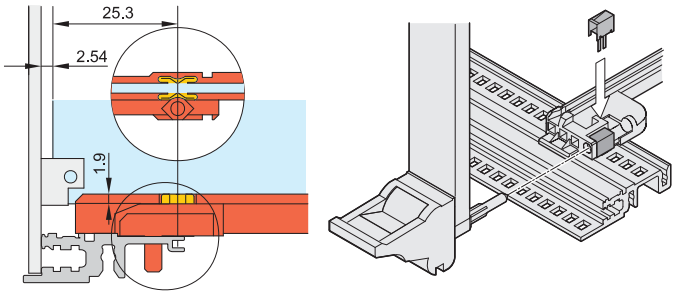

04503050 06103052

ESD (electrostatic discharge)

To avoid electrostatic discharge when inserting PCBs, ESD contacts are clipped into the guide rails. These establish a conductive connection between PCB and subrack-earth. Under IEC 60297-3-101 two ESD areas are defined on the euroboard. The ESD clips of the guide rail of the europacPRO subrack allow the assembly of both following variants:

- ESD area (bottom and top) over the complete board length
- ESD area (bottom/top) begins at the front from 70 mm to end of board)

Subracks – *europacPRO* Introduction

Platform-based standard solutions for individual requirements

Practical technology without time-consuming assembly. The modular europacPRO product platform allows a wide range of possible applications with only a few components. The intelligent design of all components results in remarkably simple and fast management in assembly and components.

Two ways of reaching your desired product:

- Kits
- Individual configuration

Simple assembly with europacPRO kits:

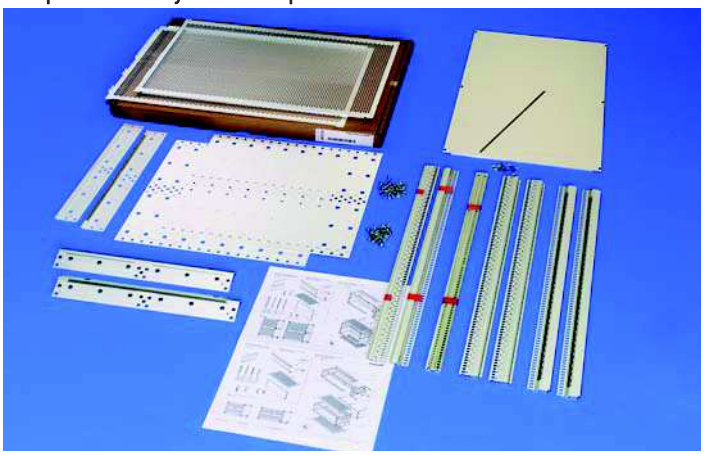

06107001

Delivered in space-saving flat packs. The threaded inserts or EMC gasket (depending on selected kit) are already pre-mounted on the horizontal rail.

Individual configuration:

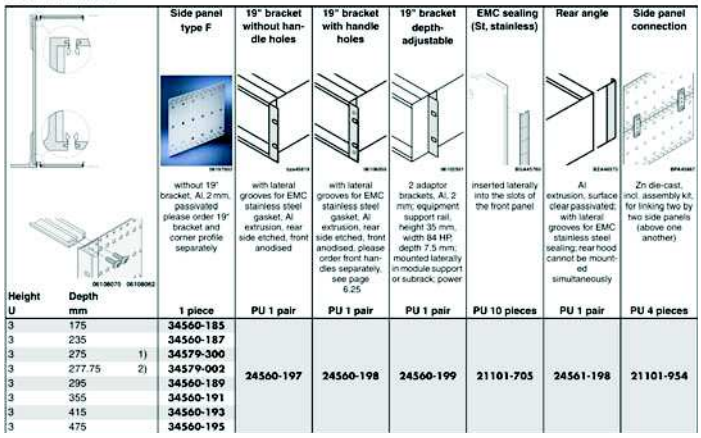

Height U	Depth mm		Side panel type F	19" bracket without handle holes	19" bracket with handle holes	19" bracket depth-adjustable	EMC sealing (St, stainless)	Rear angle	Side panel connection
			without 19" bracket, Al, 2 mm, passivated please order 19" bracket and corner profile separately	with lateral grooves for EMC stainless steel gasket, Al extrusion, rear side etched, front anodised	with lateral grooves for EMC stainless steel gasket, Al extrusion, rear side etched, front anodised, please order front handles separately, see page 6.25	2 adaptor brackets, Al, 2 mm; equipment support rail, height 35 mm, width 84 HP, depth 7.5 mm; mounted laterally in module support or subrack; power	inserted laterally into the slots of the front panel	Al extrusion, surface clear passivated; with lateral grooves for EMC stainless steel sealing; rear hood cannot be mounted simultaneously	Zn die-cast, incl. assembly kit, for linking two by two side panels (above one another)
			1 piece	PU 1 pair	PU 1 pair	PU 1 pair	PU 10 pieces	PU 1 pair	PU 4 pieces
3	175		34560-185	24560-197	24560-198	24560-199	21101-705	24561-198	21101-954
3	235		34560-187						
3	275	1)	34579-300						
3	277.75	2)	34579-002						
3	295		34560-189						
3	355		34560-191						
3	415		34560-193						
3	475		34560-195						

06109052

You design your subrack as you wish, then receive it fully assembled via our **ServicePLUS assembly service** (even for orders of just one). We can also carry out individual modifications and cut-outs; and when time is short can do so very fast via ServicePLUS express.

Horizontal rails and side panels for different load-carrying classes

06197007

Light

06197008

Heavy

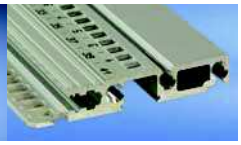

06112004

Rugged

Horizontal rails are available for three load classes:

- "light" (load up to approx. 7.5 kg)
- "heavy" (load > 7.5 kg)
- "rugged" (load 15 kg)

06197002

Type Light

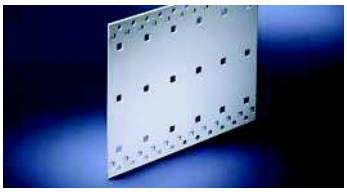

06197003

Type Flexible

06197004

Type Heavy

06112021

Type Rugged

Side panels for 4 different load classes

- Light: low-cost version with built-in 19" mounting bracket
- Flexible: with separate, depth-adjustable 19" mounting bracket
- Heavy: with integrated, tox-cold welded 19" mounting bracket, e.g. for shock and vibration environments up to 5 g
- Rugged: with integrated, tox-cold welded 19" mounting bracket and higher material thicknesses for extreme mechanical stresses, e.g. for increased shock and vibration environments up to 25 g
- The combination of the 3 horizontal rail variants with the 4 types of side panel results in an almost unlimited variety of potential applications for various market requirements

Subracks – europacPRO Introduction

Guide rails from plastic and aluminium profiles

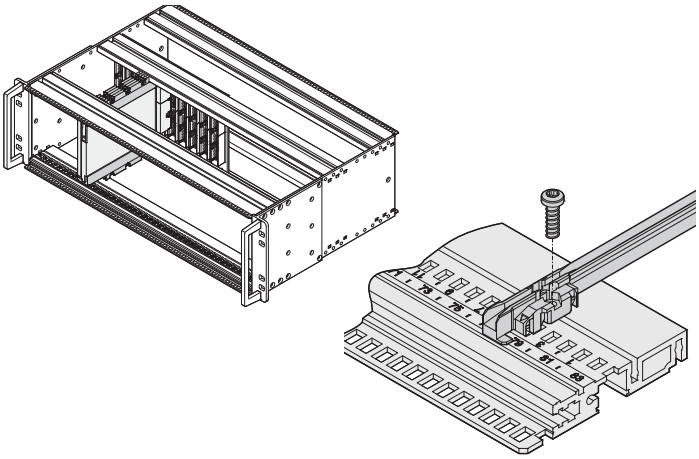

06112052 06111059

Guide rails form the interface between the subrack mechanics and the assemblies (boards, plug-in units, frame type plug-in units, drive unit modules, ...).

Robust snap-in fixings on the plastic rails assure a secure grip, even when exposed to vibrations. In the case of H and R-type horizontal rails the guide rails can also be bolted on. For extreme stresses, guide rails in aluminium extrusion are used.

To ensure that the wrong subassembly is not inserted into the wrong space we offer a mechanical coding to IEEE 1101.10/11 and IEC 60297-3-103.

The continuous numbering on the horizontal rail (from 28 HP) and the markings on the guide rails facilitate quick fitting in the correct position.

We offer the appropriate adaptors for accommodating VPX or CompactPCI boards with strengthening frame or conduction-cooled assemblies (CCA) installed in a subrack.

Electromagnetic shielding and ESD

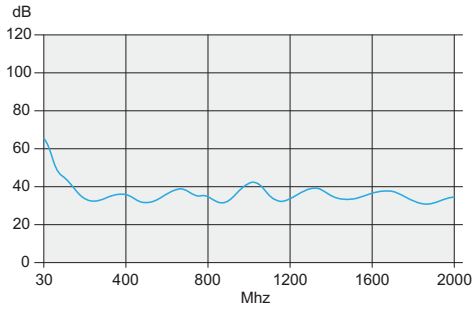

06108081

The product platform europacPRO offers a variety of off-the-shelf solutions to assure electromagnetic compatibility (EMC) and to avoid electrostatic discharge (ESD).

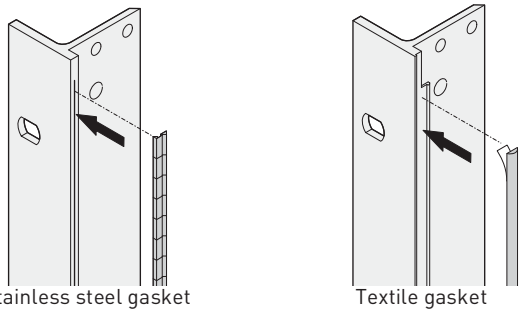

Stainless steel gasket Textile gasket

06108074 06108073

Two shielding concepts

It can't be more secure!

Two types of shielding concepts to front/rear of the subrack allow the use all Schroff frontpanels.

The shielding at the front of the subrack is by means of stainless steel or textile EMC gaskets.

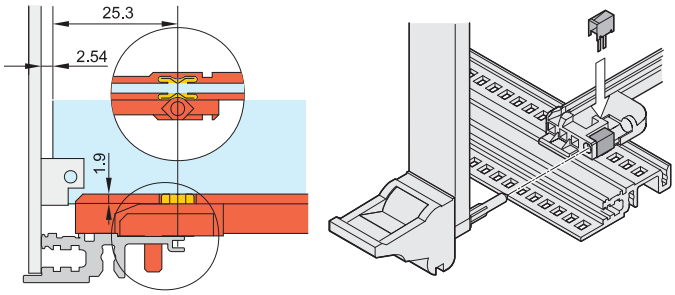

04503050 06103052

ESD (electrostatic discharge)

To avoid electrostatic discharge when inserting PCBs, ESD contacts are clipped into the guide rails. These establish a conductive connection between PCB and subrack-earth. Under IEC 60297-3-101 two ESD areas are defined on the euroboard. The ESD clips of the guide rail of the europacPRO subrack allow the assembly of both following variants:

- ESD area (bottom and top) over the complete board length
- ESD area (bottom/top) begins at the front from 70 mm to end of board)

Content

Subracks – europacPRO

Cabinets 1

Wall mounted cases 2

Accessories for cabinets and wall mounted cases . 3

Climate control . 4

Electronics cases 5

Subracks/ 19" chassis 6

Front panels, plug-in units ... 7

Systems 8

Power supply units 9

Backplanes ... 10

Connectors, front panel component system 11

Appendix 12

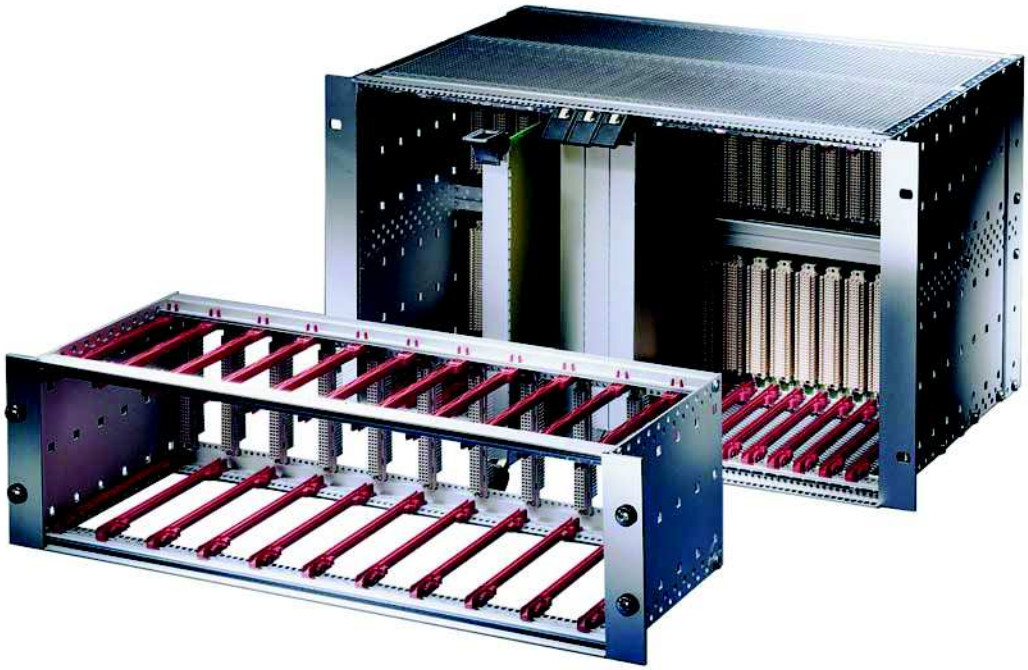

06197001

06112014

Different horizontal rails for various applications

04602002

The IEEE handles and shielded front panels are designed for the construction of CompactPCI and VME64x subrack systems

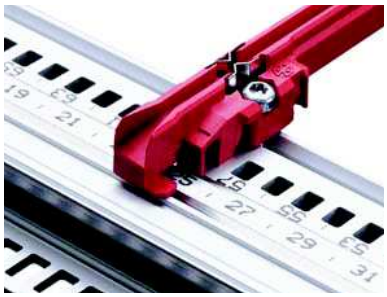

06

Sequential numbering on horizontal rails (> 28 HP) and markings on the guide rails provide quick optical positioning aids. ESD clips can be used at front or rear, to protect electronics from electrostatic discharge

Standards/certifications

- Inner and outer dimensions meet:
  IEC 60297-3-100, -101, - 102, -103, -104, -105
  IEEE 1101.1 and IEEE 1101.10/11
- Type of protection IP 20 to IEC 60529
- EMC testing to IEC 61587-3
- Shock and vibration test reports:
  German "Bahn" standards BN 411002, BN 411003;
  NF F 60002, NF F 67012
  IEC 61587-2, EN 50155
- Nuclear plants KTA 1401

EMC curve

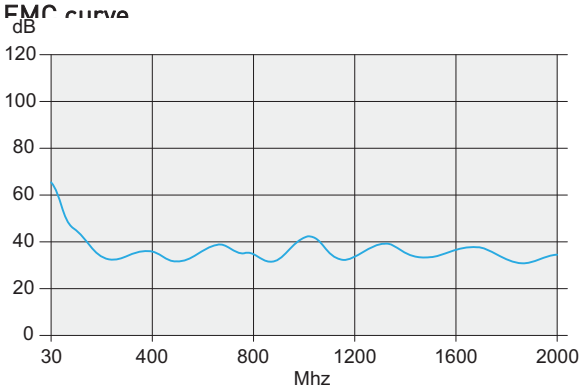

06108081

Subracks – europacPRO

Overview 6.6

19" subracks

- Kits or individual configuration
- One product and accessories platform for every kind of customer requirement and application
- Suitable for CompactPCI and VME64x insertion and extractor handles
- EMC shielding can easily be retrofitted if needed
- Shock and vibration resistant up to 5 g
- 3D PDF or CAD 3D data available for download

Introduction.... 6.4

06102008

Kits

- All required parts available under one order number, some pre-fitted
- Most popular dimensions and versions available from stock
- For installed loads up to 7.5 kg, up to 11 kg and up to 15 kg
- As unshielded or shielded version
- Supplied as space-saving flat-pack

Kits
Light 6.8
Flexible 6.9
Heavy 6.14
CompactPCI..... 6.16

ServicePLUS ... 6.16

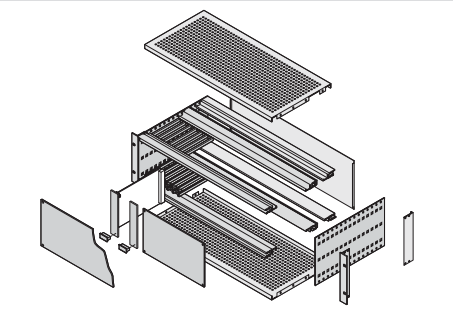

06105058

ServicePLUS individual configuration

- Single parts may individually be configured, respectively assembled on request (from quantity 1)
- Very wide range of variants in heigth, width and depth
- Guide rails for different applications
- EMC shielding material to improve EMC performance
- Interior assembly options with mounting plate or combined mounting (3 + 6 U segments)
- Other accessories and assembly kits

ServicePLUS configuration
Side panels 6.21
Horizontal rails, threaded inserts, perforated strips . 6.29
Guide rails 6.37
Cover plates 6.44
EMC shielding ... 6.54
Interior assemblies 6.59
Assembly kits 6.65

Application examples 6.71

Subracks for mobile railway applications 6.70

europacPRO for industrial applications 6.86

europacPRO for rugged applications 6.92

30407004

ServicePLUS from page 6.16

e.g. individual configuration and assembly
e.g. modification (cut-outs)
e.g. downloads (CAD drawings, user manuals, test reports)
e.g. custom solutions

www.schroff.biz/ServicePLUS

Subracks – europacPRO

Kit, "light", unshielded, for backplane mounting

06111002

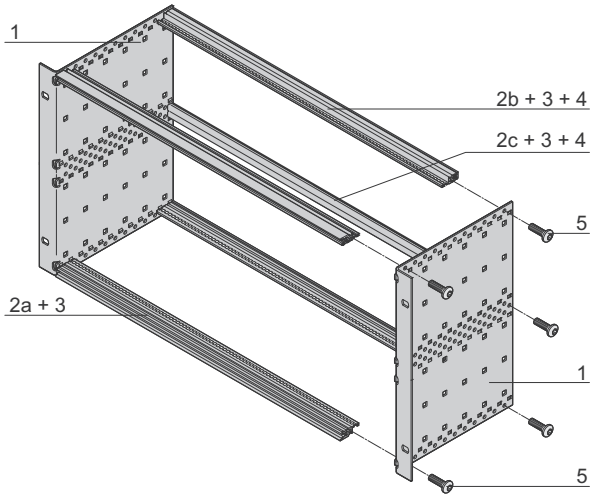

06111056

6 U

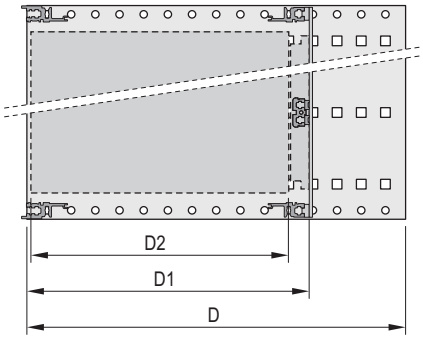

06108051

D = overall depth, D1 = insertion depth,
D2 = board depth = D1 - 15 mm

04400001

Rear horizontal rail for backplane mounting with insulation strip

- Subrack with side panel type L ("light") with firmly fixed 19" brackets
- Rear horizontal rails for backplane mounting with insulation strip
- Installed load up to 7.5 kg
- Cost-optimised

NEW

Delivery comprises (Kit)

Item	Qty 3 U	Qty 6 U	Description
1	2	2	Side panel type L, Al, 2 mm, passivated, with built-in 19" support bracket
2a	2	2	Front horizontal rail (L-KD)
2b	2	2	Rear horizontal rail (L-ST)
2c	-	1	Rear horizontal rail centre (ST)
3	4	6	Threaded insert, front and rear (pre-fitted)
4	2	4	Insulation strip (pre-fitted)
5	1	1	Fixing material kit, user manual

Order Information

Height U	Width HP	Depth D mm	Depth D1 mm	Part no.
3	84	175	175	**24564-131**
3	84	235	175/235	**24564-132**
3	84	295	175/235/295	**24564-133**
6	84	175	175	**24564-431**
6	84	235	175/235	**24564-432**
6	84	295	175/235/295	**24564-433**

Accessories

19" assembly kit (screw, washer, nut) (8 × screws, 8 × plastic washers, 8 × cage nuts)	**21100-435**

Guide rails (standard), ESD clips

Depth D2 mm	Qty/PU piece	Part no.
160	10	**24560-351**
220	10	**24560-353**
280	10	**24560-379**

ESD clips for guide rails PU 50 pieces	**24560-255**

Cover plates for insertion in horizontal rails (type L)

Depth D2 mm	Width HP	Qty/PU piece	Part no.
160	84	2	**24561-051**
220	84	2	**24561-052**

Note

- Subrack is not prepared for shielding
- ServicePLUS configuration from page 6.16

ServicePLUS see page 6.16

Subracks – europacPRO

Kit, "flexible", unshielded, for connector mounting

06105001

Photo: 3 U subrack

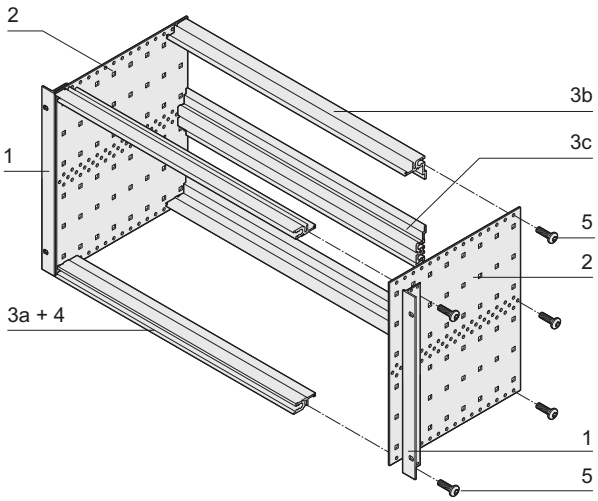

06105054

6 U

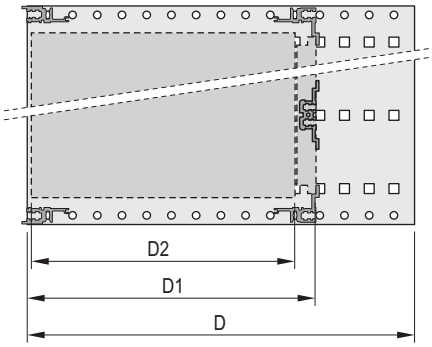

06108050

D = overall depth, D1 = insertion depth,
D2 = board depth = D1 - 15 mm

04400003

Horizontal rail to rear for connector mounting

ServicePLUS see page 6.16

- Subrack with side panel type F ("flexible"), 19" bracket is depth-adjustable
- Rear horizontal rails for connector mounting (IEC 60603-2 / DIN 41612)
- Installed load up to 11 kg

Delivery comprises (kit)

Item	Qty 3 U	Qty 6 U	Description
1	2	2	19" support bracket, Al extrusion, for EMC gasket (St, stainless)
2	2	2	Side panel type F, Al, 2 mm
3a	2	2	Front horizontal rail (L-KD)
3b	2	2	Rear horizontal rail (L-MZ) for connector mounting
3c	-	1	Centre horizontal rail (MZ)
4	2	2	Threaded insert to front (pre-fitted)
5	1	1	Fixing material kit, user manual

Order Information

Height U	Width HP	Depth D mm	Depth D1 mm	Part no.
3	84	175	175	**24563-191**
3	84	235	175/235	**24563-192**
3	84	295	175/235/295	**24563-193**
3	84	355	175/235/295/355	**24563-194**
6	84	175	175	**24563-491**
6	84	235	175/235	**24563-492**
6	84	295	175/235/295	**24563-493**
6	84	355	175/235/295/340	**24563-494**

Accessories

19" assembly kit (screw, washer, nut) (8 × screws, 8 × plastic washers, 8 × cage nuts)	**21100-435**

Guide rails (standard), ESD clips

Depth D2 mm	Qty/PU piece	Part no.
160	10	**24560-351**
220	10	**24560-353**
280	10	**24560-379**
340	10	**24560-380**
ESD clip for guide rails PU 50 pieces		**24560-255**

Cover plates for insertion in horizontal rails (type L)

Depth D2 mm	Width HP	Qty/PU piece	Part no.
160	84	2	**24561-051**
220	84	2	**24561-052**

Note

- ServicePLUS configuration from page 6.16

Subracks – europacPRO

Subrack kit, unshielded for connector, assembly on slide rail

06105001

Photo: 3 U subrack

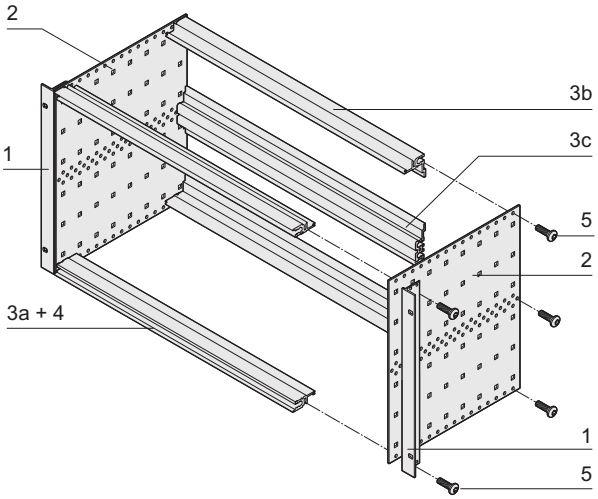

06105054

6 U

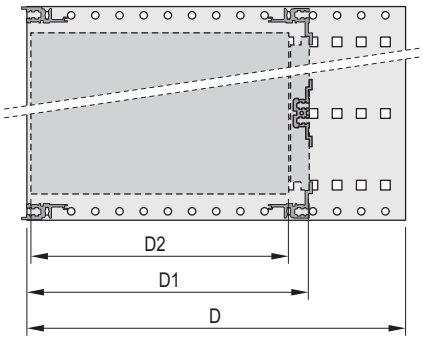

06108050

D=overall depth, D1=insertion depth,
D2=board depth = D1 - 15 mm

04400003

Rear horizontal rail for connector mounting

- Subrack can be used with slide rails
- Subrack with side panel type F ("flexible"), 19" bracket is depth-adjustable
- Horizontal rails, rear, for connector mounting (IEC 60603-2 / DIN 41612)
- Installed load up to 11 kg

Delivery includes (Kit, flat pack)

Item	Qty 3 U	Qty 6 U	Description
1	2	2	19" support bracket, Al extrusion, for EMC sealing (St, stainless)
2	2	2	Side panel type F, Al, 2 mm
3a	2	2	Front horizontal rail (L-KD)
3b	2	2	Rear horizontal rail (L-MZ) for connector mounting
3c	-	1	Center horizontal rail (MZ)
4	2	2	Threaded insert to front (pre-fitted)
5	1	1	Fixing materials kit, user manual

Order Information

Height U	Width HP	Depth D mm	Depth D1 mm	Part no.
3	84	235	175/235	24553-192
3	84	295	175/235/295	24553-193
3	84	355	175/235/295/355	24553-194
6	84	235	175/235	24553-492
6	84	295	175/235/295	24553-493
6	84	355	175/235/295/355	24553-494

Accessories

19" fixing material kit (screw, washer, nut) (8 × screws, 8 × plastic washers, 8 × cage nuts)	**21100-435**

Guide rails (standard), ESD clips

Depth D2 mm	Qty/PU piece	Part no.
160	10	**24560-351**
220	10	**24560-353**
280	10	**24560-379**

ESD clip for guide rails Spring steel, tin-plated, silver, PU 50 pieces	**24560-255**

Cover plates for insertion into horizontal rail type L

Depth D2 mm	Width HP	Qty/PU piece	Part no.
160	84	2	**24561-051**
220	84	2	**24561-052**

Note

- Alternative product for older europac lab and europacRational subrack series
- ServicePLUS configuration from page 6.18

Subracks – europacPROKits

Subrack kit, unshielded, flexible for backplane, assembly on slide rail

06102007

Photo: 3 U subrack

6 U

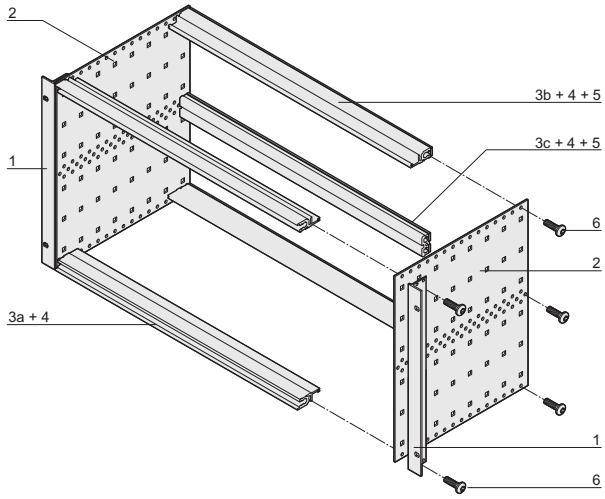

06102081

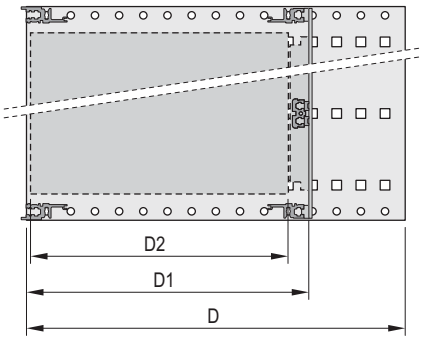

06108051

D=overall depth, D1=insertion depth,
D2=board depth = D1 - 15 mm

04400001

Rear horizontal rail for backplane mounting with insulation strip

- Subrack can be used with slide rails
- Subrack with side panel type F ("flexible"), 19" bracket is depth-adjustable
- Rear horizontal rails for backplane mounting with insulation strip
- Installed load up to 11 kg

Delivery includes (Kit, flat pack)

Item	Qty 3 U	Qty 6 U	Description
1	2	2	19" support bracket, Al extrusion, for EMC sealing (St, stainless)
2	2	2	Side panel type F, Al, 2 mm
3a	2	2	Front horizontal rail (L-KD)
3b	2	2	Rear horizontal rail (L-ST) for backplane mounting
3c	-	1	Rear center horizontal rail (ST)
4	4	6	Threaded inserts, front and rear (pre-fitted)
5	2	4	Insulation strip (pre-fitted)
6	1	1	Fixing materials kit, user manual

Order Information

Height U	Width HP	Depth D mm	Depth D1 mm	Part no.
3	84	235	175/235	24553-132
3	84	295	175/235/295	24553-133
3	84	355	175/235/295/355	24553-134
6	84	235	175/235	24553-432
6	84	295	175/235/295	24553-433
6	84	355	175/235/295/355	24553-434

Accessories

19" fixing material kit (screw, washer, nut) (8 × screws, 8 × plastic washers, 8 × cage nuts)	**21100-435**

Guide rails (standard), ESD clips

Depth D2 mm	Qty/PU piece	Part no.
160	10	**24560-351**
220	10	**24560-353**
280	10	**24560-379**
340	10	**24560-380**

ESD clip for guide rails Spring steel, tin-plated, silver, PU 50 pieces	**24560-255**

Cover plates for insertion into horizontal rail type L

Depth D2 mm	Width HP	Qty/PU piece	Part no.
160	84	2	**24561-051**
220	84	2	**24561-052**

Note

- Alternative product for older europac lab and europacRational subrack series
- ServicePLUS configuration from page 6.18

Subracks – europacPROKits

Kit, "flexible", unshielded, for backplane mounting

06102007

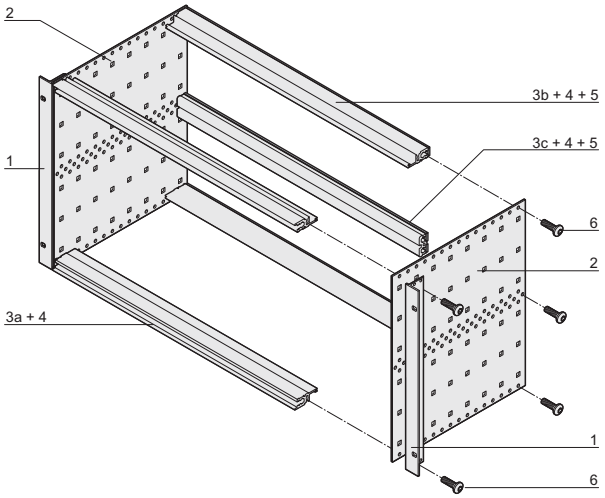

06102081

6 U

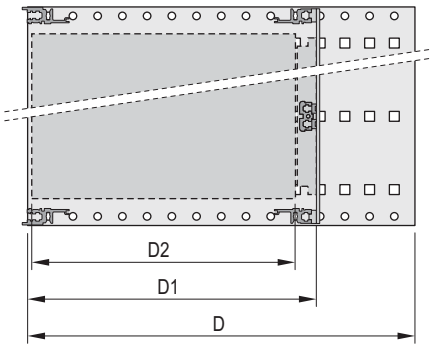

06108051

D = overall depth, D1 = insertion depth,
D2 = board depth = D1 - 15 mm

04400001

Rear horizontal rail for backplane mounting with insulation strip

- Subrack with side panel type F ("flexible"), 19" bracket is depth-adjustable
- Rear horizontal rail for backplane mounting with insulation strip
- Installed load up to 11 kg

Delivery comprises (kit)

Item	Qty 3 U	Qty 6 U	Description
1	2	2	19" support bracket, Al extrusion, for EMC stainless steel gasket
2	2	2	Side panel type F, Al, 2 mm
3a	2	2	Front horizontal rail (L-KD)
3b	2	2	Rear horizontal rail (L-ST) for backplane mounting
3c	-	1	Rear horizontal rail centre (ST)
4	4	6	Threaded insert, front and rear (pre-fitted)
5	2	4	Insulation strip (pre-fitted)
6	1	1	Fixing material kit, user manual

Order Information

Height U	Width HP	Depth D mm	Depth D1 mm	Part no.
3	84	175	175	24563-131
3	84	235	175/235	24563-132
3	84	295	175/235/295	24563-133
3	84	355	175/235/295/355	24563-134
3	84	415	175/235/295/355	24563-135
3	84	475	175/235/295/355	24563-136
6	84	175	175	24563-431
6	84	235	175/235	24563-432
6	84	295	175/235/295	24563-433
6	84	355	175/235/295/355	24563-434
6	84	415	175/235/295/355	24563-435
6	84	475	175/235/295/355	24563-436

Accessories

19" assembly kit (screw, washer, nut) (8 × screws, 8 × plastic washers, 8 × cage nuts)	21100-435

Guide rails (standard), ESD clips

Depth D2 mm	Qty/PU piece	Part no.
160	10	24560-351
220	10	24560-353
280	10	24560-379
340	10	24560-380
ESD clip for guide rails PU 50 pieces		24560-255

Cover plates for insertion in horizontal rails (type L)

Depth D2 mm	Width HP	Qty/PU piece	Part no.
160	84	2	24561-051
220	84	2	24561-052

Note

- ServicePLUS configuration from page 6.16

ServicePLUS see page 6.16

Subracks – europacPROKits

Kit, "flexible", shielded, for backplane mounting

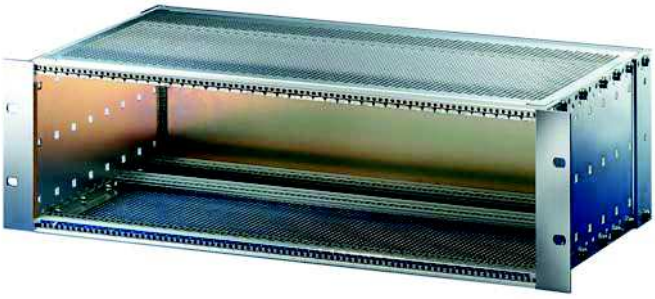

06102008

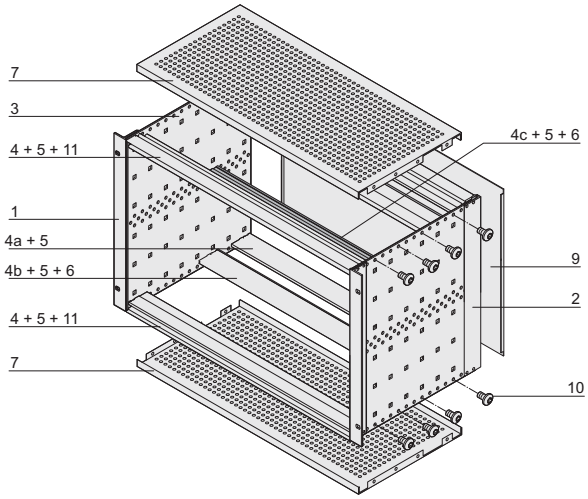

6 U

06102075

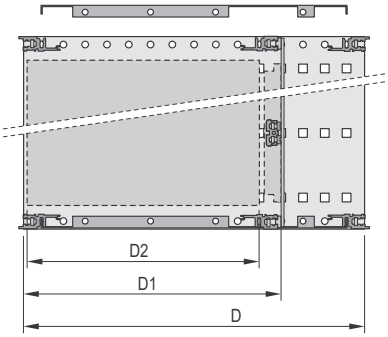

06113056

D = overall depth, D1 = insertion depth,
D2 = board depth = D1 - 15 mm

04400001

Rear horizontal rail for backplane mounting with insulation strip

- Subrack with side panel type F ("flexible"), 19" bracket is depth-adjustable
- Rear horizontal rail for backplane mounting with insulation strip
- Shielding typically 40 dB at 1 GHz, 30 dB at 2 GHz, assuming that the front is closed with shielded front panels
- Installed load up to 11 kg

Delivery comprises ((kit))

Item	Qty 3 U	Qty 6 U	Description
1	2	2	19" support bracket for **EMC textile gasket**
2	2	2	Rear corner profile for **EMC textile gasket**
3	2	2	Side panel type F
4	2	2	Front horizontal rail (L-KD)
4 a	2	2	Rear horizontal rail (L-KD)
4 b	2	2	Rear horizontal rail (L-ST) for backplane mounting with insulation strip
4 c	-	1	Centre horizontal rail (ST)
5	6	8	Threaded insert (pre-fitted)
6	2	4	Insulation strip, fixed
7	2	2	EMC cover plate
8	1	1	EMC gasketing material (pre-fitted)
9	1	1	Rear panel
10	1	1	Fixing material kit
11	2	2	Perforated strip (pre-fitted)
12	1	1	User manual

Order Information

Height U	Width HP	Depth D mm	Depth D1 mm	Part no.
3	84	235	175/235	**24563-142**
3	84	295	175/235/295	**24563-143**
3	84	355	175/235/295	**24563-144**
3	84	415	175/235/295	**24563-145**
3	84	475	175/235/295	**24563-146**
6	84	235	175/235	**24563-442**
6	84	295	175/235/295	**24563-443**
6	84	355	175/235/295	**24563-444**
6	84	415	175/235/295	**24563-445**
6	84	475	175/235/295	**24563-446**

Accessories

19" assembly kit (screw, washer, nut) (8 × screws, 8 × plastic washers, 8 × cage nuts)	**21100-435**

Guide rails (standard), ESD clips

Depth D2 mm	Qty/PU piece	Part no.
160	10	**24560-351**
220	10	**24560-353**
280	10	**24560-379**
340	10	**24560-380**
ESD clip for guide rails PU 50 pieces		**24560-255**

Note

- ServicePLUS configuration from page 6.16

ServicePLUS see page 6.16

Subracks – europacPROKits

Kit, 'heavy', unshielded, for backplane mounting

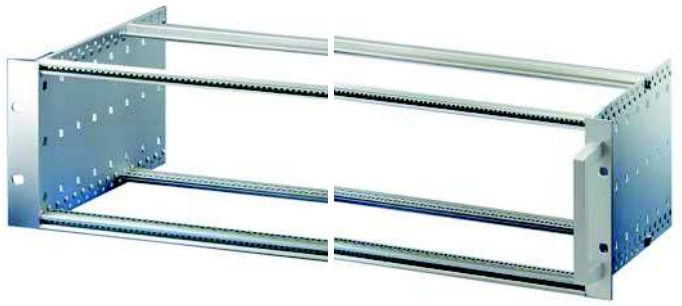

06102007 06111003

Without front handle With front handle

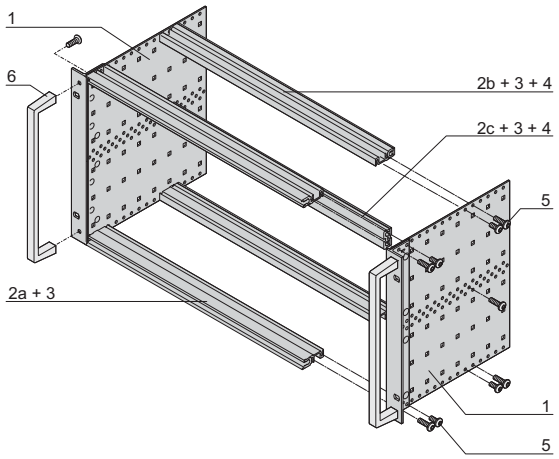

6 U

06111057

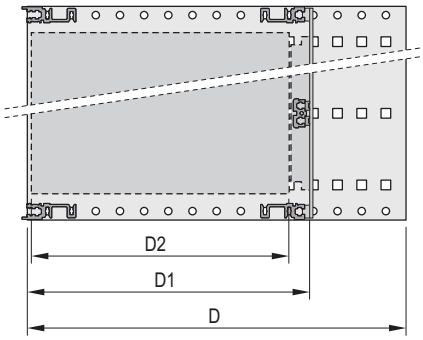

06108052

D = overall depth, D1 = insertion depth, D2 = board depth

04400001

Rear horizontal rail for backplane mounting with insulation strip

ServicePLUS see page 6.16

- Subrack with side panel type H ("heavy"), 19" bracket is firmly fixed to side panel (tox-cold welded)
- Rear horizontal rail for backplane mounting with insulation strip
- Shock and vibration resistance up to 5 g
- Installed load up to 15 kg
- Versions with/without front handles

NEW

Delivery comprises (Kit)

Item	Qty 3 U	Qty 6 U	Description
1	2	2	Side panel type H, Al, 2 mm, passivated, with 19" support bracket (tox-cold welded) for textile EMC gasket
2a	2	2	Front horizontal rail (H-KD)
2b	2	2	Rear horizontal rail (H-ST)
2c	-	1	Rear horizontal rail centre (H-ST)
3	4	6	Threaded insert, front and rear (pre-fitted)
4	2	4	Insulation strip (pre-fitted)
5	1	1	Fixing material kit, user manual
6	2	2	Front handle (on version with front handle only)

Order Information

Height U	Width HP	Depth D mm	Depth D1 mm	Part no. with front handle	Part no. without front handle
3	84	175	175	24567-161	24563-161
3	84	235	175/235	24567-162	24563-162
3	84	295	175/235/295	24567-163	24563-163
3	84	355	175/235/295/355	24567-164	24563-164
6	84	175	175	24567-461	24563-461
6	84	235	175/235	24567-462	24563-462
6	84	295	175/235/295	24567-463	24563-463
6	84	355	175/235/295/355	24567-464	24563-464

Accessories

19" assembly kit (screw, washer, nut) (8 × screws, 8 × plastic washers, 8 × cage nuts)	21100-435

Guide rails (standard), ESD clips

Depth D2 mm	Qty/PU piece	Part no.
160	10	24560-351
220	10	24560-353
280	10	24560-379
340	10	24560-380

ESD clip for guide rails PU 50 pieces	24560-255
Torx panhead screw , for extra bolting of the guide rails, 2.5 × 9.3, zinc-plated, PU 100 pieces; torque max. 0.2 Nm	24560-141

Cover plates for bolting to side panel

Depth D2 mm	Width HP	Qty/PU piece	Part no.
160	84	2	24560-078
220	84	2	24560-079
280	84	2	24560-080
340	84	2	24560-081

Note

- ServicePLUS configuration from page 6.16

Subracks – europacPROKits

Kit, "heavy", shielded, for backplane mounting

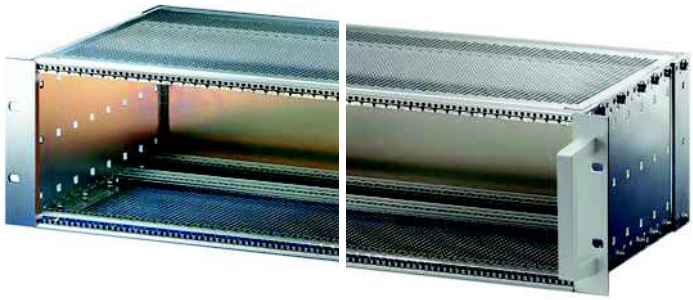

06102008 06111001

Without front handle With front handle

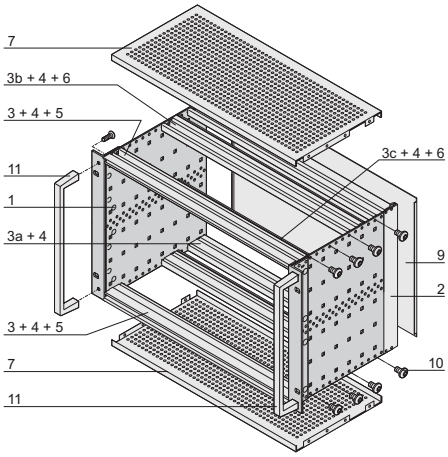

6 U

06111058

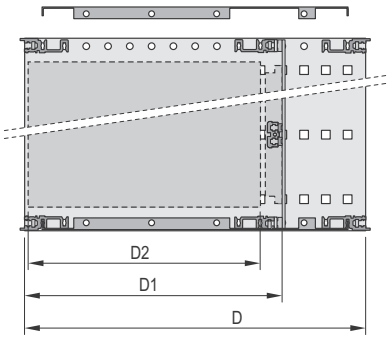

06113055

D = overall depth, D1 = insertion depth,
D2 = board depth = D1 - 15 mm

04400001

Rear horizontal rail for backplane mounting with insulation strip

ServicePLUS see page 6.16

- Subrack with side panel type H ("heavy"), 19" bracket is firmly fixed to side panel (tox-cold welded)
- Rear horizontal rail for backplane mounting with insulation strip
- Shielding typically 40 dB at 1 GHz, 30 dB at 2 GHz, assuming that the front is closed with sealed front panels
- Shock and vibration resistance up to 5 g
- Installed load up to 15 kg
- Versions with/without front handles

NEW

Delivery comprises (Kit)

Item	Qty 3 U	Qty 6 U	Description
1	2	2	Side panel type H, Al, 2 mm, passivated, with 19" support bracket (tox-cold welded); for textile EMC gasket
2	2	2	Rear corner profile for textile EMC gasket
3	2	2	Front horizontal rail (H-KD)
3 a	2	2	Rear horizontal rail (H-KD)
3 b	2	2	Rear horizontal rail (H-ST)
3 c	-	1	Rear horizontal rail centre (ST)
4	6	8	Threaded insert (pre-fitted)
5	2	2	Perforated strip (pre-fitted)
6	2	4	Insulation strip (pre-fitted)
7	2	2	EMC cover plate
8	1	1	EMC gasketing material (pre-fitted)
9	1	1	EMC rear panel
10	1	1	Fixing material kit, user manual
11	2	2	Front handle (on version with front handle only)

Order Information

Height U	Width HP	Depth D mm	Depth D1 mm	Part no. with front handle	Part no. without front handle
3	84	235	175/235	**24567-172**	**24563-172**
3	84	295	175/235/295	**24567-173**	**24563-173**
3	84	355	175/235/295	**24567-174**	**24563-174**
6	84	235	175/235	**24567-472**	**24563-472**
6	84	295	175/235/295	**24567-473**	**24563-473**
6	84	355	175/235/295	**24567-474**	**24563-474**

Accessories

19" assembly kit (screw, washer, nut) (8 × screws, 8 × plastic washers, 8 × cage nuts)	**21100-435**

Guide rails (standard), ESD clips

Depth D2 mm	Qty/PU piece	Part no.
160	10	**24560-351**
220	10	**24560-353**
280	10	**24560-379**

ESD clip for guide rails PU 50 pieces	**24560-255**
Torx panhead screw , for extra bolting of the guide rails, 2.5 × 9.3, zinc-plated, PU 100 pieces; torque max. 0.2 Nm	**24560-141**

Note

- ServicePLUS configuration from page 6.16

Subracks – europacPROKits

Kit, for CompactPCI, for backplane mounting, without rear I/O, shielded

06102009

- Subrack with side panel type F ("flexible") for CompactPCI plug-in units with high insertion and withdrawal forces
- Rear horizontal rail for backplane mounting with insulation strip
- Shielding typically 40 dB at 1 GHz, 30 dB at 2 GHz, assuming that the front is covered with shielded front panels
- Installed load up to 11 kg

6 U

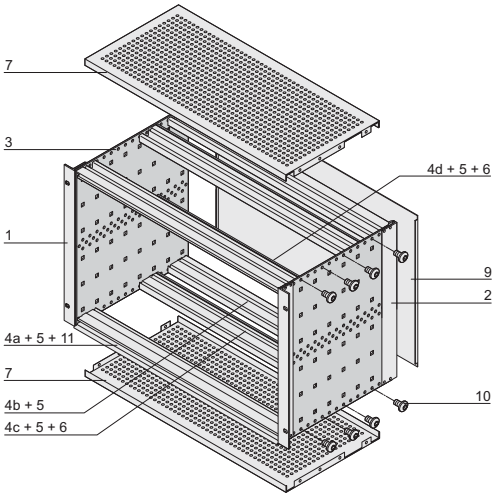

06102078

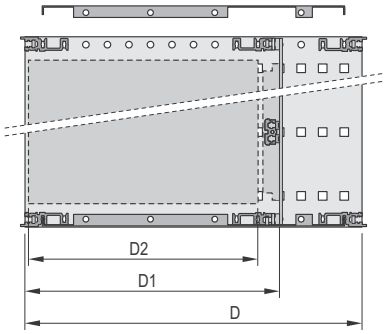

06113055

D = overall depth, D1 = insertion depth,
D2 = board depth = D1 - 15 mm

04400001

Rear horizontal rail for backplane mounting with insulation strip

Delivery comprises (kit)

Item	Qty 3 U	Qty 6 U	Description
1	2	2	19" support bracket for **EMC textile gasket**
2	2	2	Rear corner profile for **EMC textile gasket**
3	2	2	Side panel type F
4	1	-	Front horizontal rail (H-KD)
4 a	1	2	Front horizontal rail IEEE (H-LD)
4 b	2	2	Rear horizontal rail (L-KD)
4 c	2	2	Rear horizontal rail (H-ST), for backplane mounting with insulation strip
4 d	-	1	Centre horizontal rail (ST)
5	6	8	Threaded insert (pre-fitted)
6	2	4	Insulation strip (pre-fitted)
7	2	2	EMC cover plate
8	1	1	EMC gasketing material (pre-fitted)
9	1	1	Rear panel
10	1	1	Fixing material kit
11	2	2	Perforated strip (pre-fitted in item 4+4a)
12	1	1	User manual

Order Information

Height U	Width HP	Depth D mm	Depth D1 mm	Part no.
3	84	235	175	**24563-152**
6	84	235	175	**24563-452**

Accessories

Guide rail with coding, red 160 mm deep, PBT, UL 94 V-0, groove width 2 mm, PU 10 pieces	**24560-356**
Guide rail with coding, grey 160 mm deep, PBT, UL 94 V-0, groove width 2 mm, PU 10 pieces	**24560-358**
Guide rail with coding, green, offset 160 mm deep, PBT, UL 94 V-0, groove width 2 mm, PU 10 pieces	**24560-359**
ESD clip for guide rails PU 50 pieces	**24560-255**
ESD clip for alignment pin of CPCI/VME64x handle PU 50 pieces	**24560-256**
Torx panhead screw 2.5 × 9.3, zinc-plated, PU 100 pieces; torque max. 0.2 Nm	**24560-141**
Coding peg PC, UL 94 V-0, RAL 7035, PU 100 pieces	**20817-501**
19" assembly kit (screw, washer, nut) (8 × screws, 8 × plastic washers, 8 × cage nuts)	**21100-435**

Note

- ServicePLUS configuration from page 6.16

ServicePLUS see page 6.16

Subracks – europacPROKits

Kit, for CompactPCI, for backplane mounting, for rear I/O, shielded

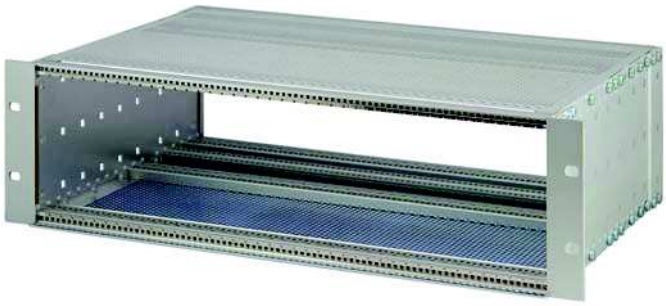

06108007

6 U

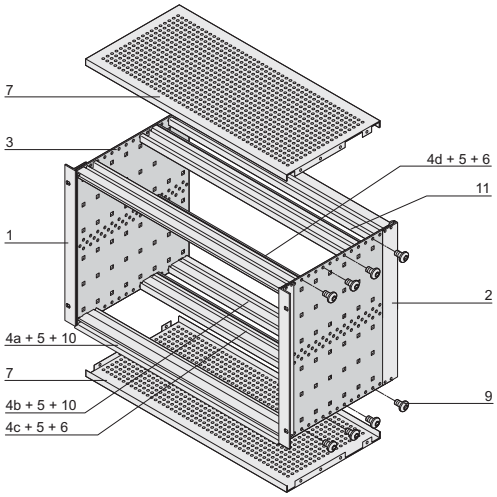

06105076

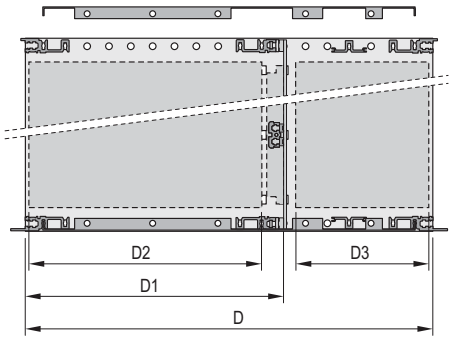

06108075

D = overall depth, D1 = insertion depth,
D2 = board depth = D1 - 15 mm, D3 = rear I/O board depth

04400001

Rear horizontal rail for backplane mounting with insulation strip

- Subrack with side panel type F ("flexible") for CompactPCI plug-in units with high insertion and withdrawal forces
- For rear I/O boards (depth 80 mm)
- Rear horizontal rail for backplane mounting with insulation strip
- Shielding typically 40 dB at 1 GHz, 30 dB at 2 GHz, assuming that the front is covered with shielded front panels
- Installed load up to 11 kg

Delivery comprises (kit)

Item	Qty 3 U	Qty 6 U	Description
1	2	2	19" support bracket for **EMC textile gasket**
2	2	2	Rear corner profile for **EMC textile gasket**
3	2	2	Side panel type F
4	1	-	Front horizontal rail (H-KD)
4 a	1	2	Front horizontal rail IEEE (H-LD)
4 b	2	2	Rear horizontal rail (H-KD)
4 c	2	2	Rear horizontal rail (H-ST), with insulation strip for backplane mounting
4 d	-	1	Centre horizontal rail (ST)
5	6	8	Threaded insert (pre-fitted)
6	2	4	Insulation strip, fixed
7	2	2	EMC cover plate
8	1	1	EMC gasketing material (pre-fitted)
9	1	1	Fixing material kit
10	2	2	Perforated strip (pre-fitted)
11	2	2	Horizontal rail type AB
12	1	1	User manual

Order Information

Height U	Width HP	Depth D mm	Depth D1 mm	Depth D3 mm	Part no.
3	84	275	175	80	**24563-157**
6	84	275	175	80	**24563-457**

Accessories

Guide rail with coding, red 160 mm deep, PBT, UL 94 V-0, groove width 2 mm, PU 10 pieces	**24560-356**
Guide rail with coding, grey 160 mm deep, PBT, UL 94 V-0, groove width 2 mm, PU 10 pieces	**24560-358**
Guide rail with coding, green, offset 160 mm deep, PBT, UL 94 V-0, groove width 2 mm, PU 10 pieces	**24560-359**
ESD clip for guide rails PU 50 pieces	**24560-255**
ESD clip for alignment pin of CPCI/VME64x handle PU 50 pieces	**24560-256**
Guide rail with coding, red 70 mm deep, PU 10 pieces	**24560-355**
Guide rail with coding, grey 70 mm deep, PU 10 pieces	**24560-360**
Torx panhead screw 2.5 × 9.3, zinc-plated, PU 100 pieces; torque max. 0.2 Nm	**24560-141**
Coding peg PC, UL 94 V-0, RAL 7035, PU 100 pieces	**20817-501**
19" fixing material kit (screw, washer, nut) (8 × screws, 8 × plastic washers, 8 × cage nuts)	**21100-435**

Note

- ServicePLUS configuration from page 6.16

ServicePLUS see page 6.16

Subracks – europacPROServicePLUS

configuration

Components can be varied and combined freely

Simple. Fast. To the ideal product.

- Configuration tables from page 6.19
- Online configuration: www.schroff.co.uk/configuration

assembly

Fitting of all mechanical, electrical and electronic components by our specialists

Assembled by professionals. Double benefit!

- Professional and reliable from quantity 1
- Ready for despatch within 5 working days

modification

Custom drillings, cut-outs and special colours for off-the-shelf products

Small changes. Large impact.

- Custom modifications from quantity 1
- Ready for despatch within 10 working days

solution

Integration and custom developments

Simple. Fast. From one source.

- Special sizes (depth and width)
- Individual heat dissipation concepts
- Ready for despatch within 10 working days

express

Delivery time to customer's request

When fast has to be faster.

- Express logistics

academy

Knowledge transfer and partnership

Knowledge. Sharing. Partnerships.

- Seminars, CAD drawings, test reports, user reports

Subracks – europacPROServicePLUS

Overview of individual components for shielded or unshielded subracks

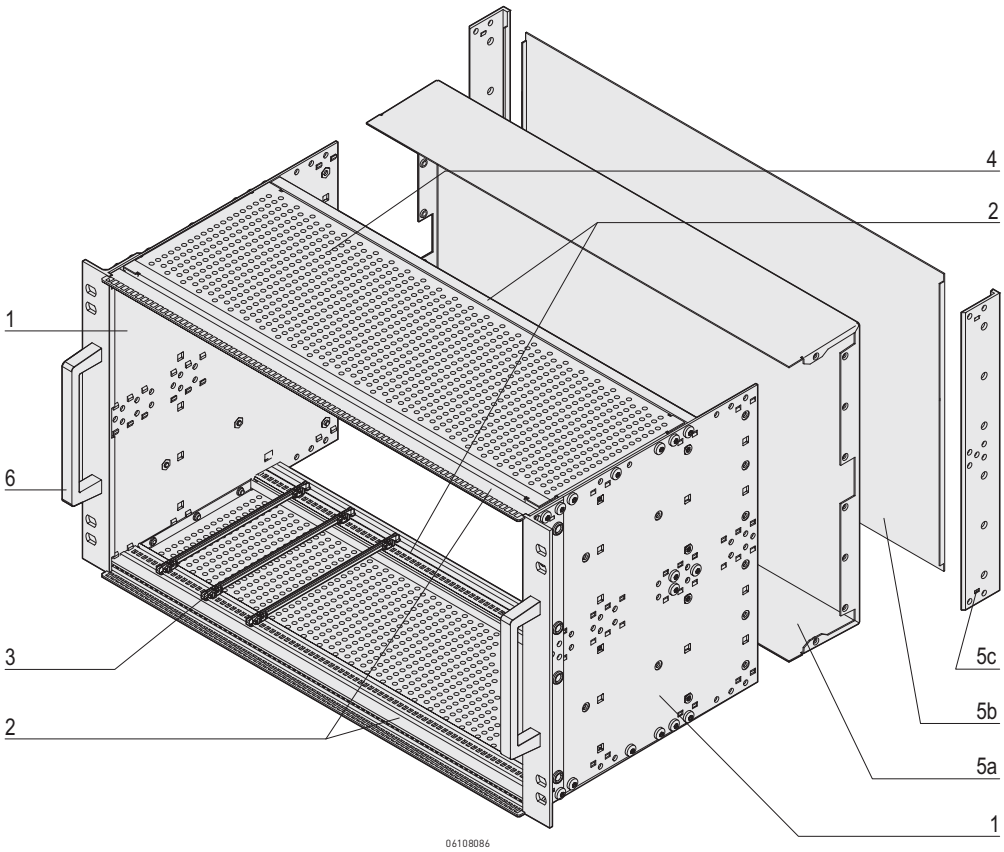

Item	Description	Description	page
Item 1	Side panel	Establishes the height and depth of the subrack; Al, 2 mm, with universal hole positions for assembly of accessories. Three versions: The "flexible" one with separate 19" brackets as well as two others with integrated 19" brackets for "light" and "heavy" applications.	6.21
Item 2	Horizontal rail	Establishes the width of the subrack; Al extrusion, with defined hole positions for guide rails, grooves for threaded inserts, M4 thread, functional rail shapes, basically differing with regard to their mechanical loading capacity: "light" (load up to 7.5 kg) and "heavy" (load > 7.5 kg).	6.29
Item 3	Guide rails	Act as interface between subracks and boards, for different board formats, are available in plastic or metal, optionally codable and can be fitted with ESD clips to allow electrostatic discharge, also optionally.	6.37
Item 4	Cover plates	Provide mechanical protection and/or EMC shielding and are perforated.	6.44
Item 5	Rear/front	Rear hood (5a) or front panel (5b) with corner profile (5c) act as support for EMC shielding gaskets used in conjunction with shielded front panels. Note: Rear hood and corner profile cannot be fitted simultaneously.	6.49
Item 6	Handles	Can be mounted on the 19" brackets.	6.27
–	EMC shielding (without illustration)	Extensive component range for specific shielding of subracks with respect to their application.	6.54
–	Interior assemblies (without illustration)	Universal assemblies, e.g. for horizontal and vertical assembly and for mounting plates.	6.59

Subracks – europacPROServicePLUS

Subrack dimensions

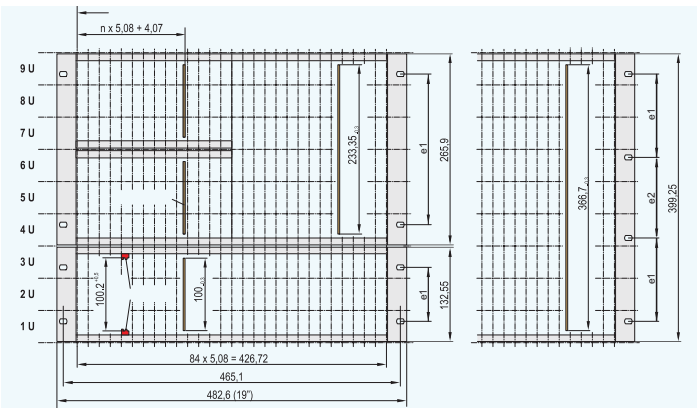

20304051

- Dimensions in accordance with international standards EC 60297-3-100, IEEE 1101.1/.10/.11; please see the Schroff Standards Summary for details
- Side panels
  - Aluminium, 2 mm
  - Round holes for mounting horizontal rails (depth grid 15 mm)
  - Impressions on the inner side of the side panel act as an anti-rotation guard and positioning aid for the horizontal rails
  - Square holes (6 x 6 mm) provide universal fixing for components such as backplane shielding; version without square holes available on request

06197003

Depth grid

The depth grid is 15 mm, the mounting holes in the side panel are decisive for the configurability of individual components; thus any combination of various individual parts is possible

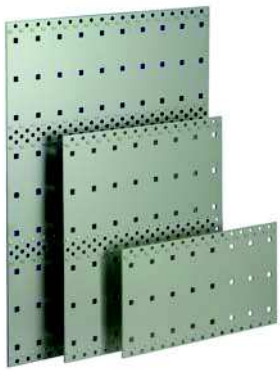

06108008

Side panel 3 U, 6 U and 9 U

3 and 6 U side panels have the same hole positions (the 6 U is a doubling vertically of the 3 U); thus subdivisions can be made in the vertical dimension (6 U: 2 x 3 U; 9 U: 3 x 3 U)

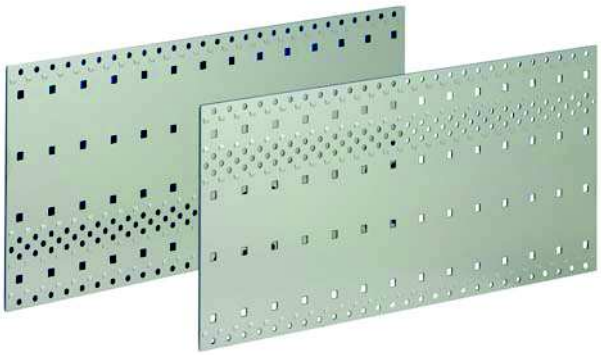

06108011

Side panel 4 U

4 U side panels have the same hole positions as 3 U and additionally 1 U (above or beneath the 3 U installation); this height allows the construction of a 3 U unit with 1 U clearance for cabling or airflow

Subracks – europacPROServicePLUS

Side panels

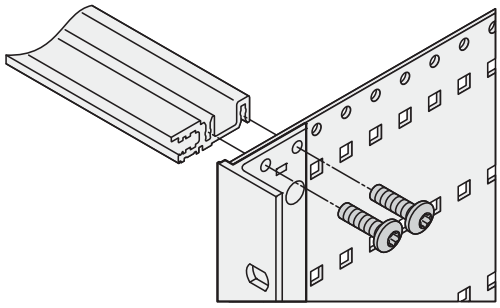

06108062

Side panel - horizontal rail assembly

- Aluminium
- Round holes for mounting horizontal rails (depth grid 15 mm)
- Impressions on the inner side of the side panel act as an anti-rotation guard and positioning aid for the horizontal rails
- Square holes (6 x 6 mm) provide universal fixing for components such as backplane shielding; version without square holes available on request
- Only one type of screw driver is needed for the assembly (torx panhead screw, M4 x 14; torque side panel - horizontal rail 2.4 Nm; torque side panel - cover plate 1.3 Nm)
- 4 versions of the side panel:
  - Type F = flexible
  - Type H = heavy
  - Type L = light
  - Type R = rugged

Note

- Type R - rugged side panels see "Rugged Subracks" section, page 6.97

06197003

Type F (flexible)

- Universal version: 19" bracket (please order separately) can be fitted variably to front, rear or depth-offset
- Heights: 3, 4, 6 and 9 U
  Depths: 175, 235, 275, 277.75, 295, 355, 415 and 475 mm;
  Other dimensions on request
- 2 EMC shielding concepts for the front/rear:
  stainless steel or textile EMC gasket
- Installed load up to 11 kg

06197004

Type H (heavy)

- 19" bracket is tox-cold welded to side panel; particularly designed for mechanically demanding environments (vibration resistance, applications requiring high levels of shock and vibration, e.g. IEC 61587-2)
- Heights: 3 and 6 U
  Depths: 175, 235, 295 and 355 mm
  Other dimensions on request
- 2 EMC shielding concepts for the front/rear:
  with stainless steel or textile EMC gasekt
- Installed load up to 15 kg

06197002

Type L (light)

- Side panel with moulded 19" bracket,
  for standard applications, unshielded
- Particularly cost-effective version
  (not suitable for EMC applications)
- Heights: 3 and 6 U
  Depths: 175, 235 and 295 mm
  Other dimensions on request
- Installed load up to 7.5 kg

Subracks – europac PRO ServicePLUS

Side panels type F for stainless steel gasket

Order Information

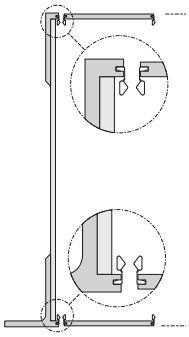

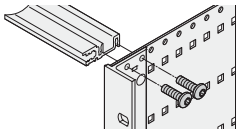

06108070 06108062

Height U	Depth mm		Side panel type F	19" bracket without handle holes	19" bracket with handle holes	19" bracket depth-adjustable	EMC gasket (stainless steel)	Rear angle	Side panel connection
			06197003	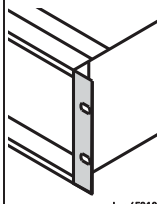 bza45819	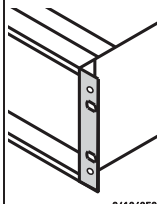 06106050	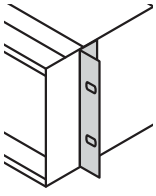 06102501	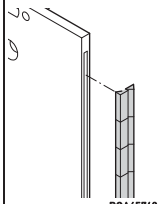 BGA45760	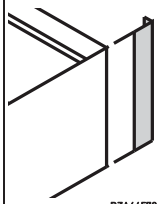 BZA46573	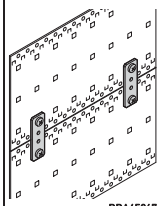 BPA45867
			without 19" bracket, Al, 2 mm, passivated, please order 19" bracket and corner profile separately	with lateral grooves for stainless steel EMC gasket, Al extrusion, rear side etched, front anodised	with lateral grooves for stainless steel EMC gasket, Al extrusion, rear side etched, front anodised please order front handles separately, see page 6.27	Al extrusion, passivated	inserted laterally into the grooves of the front panel	Al extrusion, surface clear passivated; with lateral grooves for stainless steel EMC gasekt; rear hood cannot be mounted simultaneously	Zn die-cast, incl. fixing material kit, for connecting two by two side panels (on top of each other)
U	mm		1 piece	PU 1 pair	PU 1 pair	PU 1 pair	PU 10 pieces	PU 1 pair	PU 4 pieces
3	175		34560-185	24560-197	24560-198	24560-199	21101-705	24561-198	21101-954
3	235		34560-187						
3	275	1)	34579-300						
3	277.75	2)	34579-002						
3	295		34560-189						
3	355		34560-191						
3	415		34560-193						
3	475		34560-195						
4	175	3)	34560-285	24560-297	24560-298	24560-299	21101-713	24561-298	21101-954
4	235	3)	34560-287						
4	295	3)	34560-289						
4	355	3)	34560-291						
4	415	3)	34560-293						
4	475	3)	34560-295						
6	175		34560-485	24560-497	24560-498	24560-499	21101-707	24561-498	21101-954
6	235		34560-487						
6	275	1)	34579-038						
6	277.75	2)	34579-012						
6	295		34560-489						
6	355		34560-491						
6	415		34560-493						
6	475		34560-495						
6	970		34560-496						
9	175		34560-785	24560-797	24560-798	24560-799	21101-709	24561-798	21101-954
9	235		34560-787						
9	295		34560-789						
9	355		34560-791						
9	415		34560-793						
Screw, M4 x 14, PU 100 pieces, for fastening horizontal rail to side panel			24560-130	24560-130	24560-130	24560-130	–	24560-130	–
Screw, M4 x 10, required if guide rails are screwed to slot 1, PU 100 pieces			24560-155	24560-155	24560-155	24560-155	–	24560-155	–

1) CompactPCI 2) VME64x 3) Grid holes of side panel 3 + 1 U

■ View of side panels 3, 4, 6, 9 U see page 6.20

Subracks – europacPROServicePLUS

Side panels type F for textile EMC gasket

Order Information

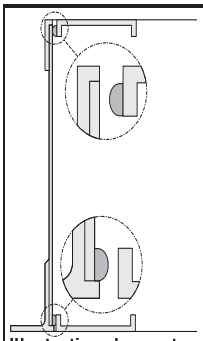

Illustration shows standard assembly, not VME or CompactPCI bus with rear I/O

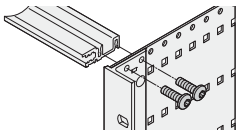

06108054 06108062

Height U	Depth mm		Side panel type F	19" bracket without handle holes	19" bracket with handle holes	19" bracket depth-adjustable	EMC gasket (textile)	Rear angle	Side panel connection
			06197003	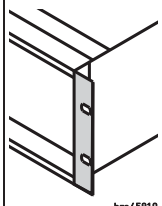 bza45819	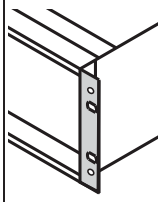 06106050	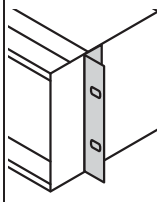 06102501	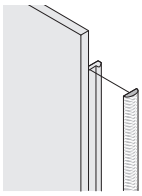 04602054	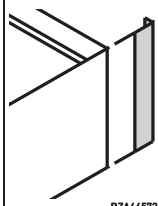 BZA46573	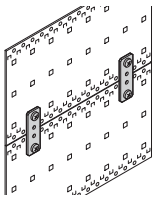 BPA45867
			without 19" bracket, Al, 2 mm, passivated, please order 19" bracket and corner profile separately	Al extrusion for textile EMC gasket rear side etched, front anodised	Al extrusion for textile EMC gasket, rear side etched, front anodised, please order front handles separately, see page 6.27	Al extrusion, passivated	textile gasket, core: foam, sleeve: textile cladding with CuNi coating, UL 94 V-0	Al extrusion, etched; for textile EMC gasket	Zn die-cast, incl. fixing material kit, for connecting two by two side panels (on top of each other)
U	mm		1 piece	PU 1 pair	PU 1 pair	PU 1 pair	PU 10 pieces	PU 1 pair	PU 4 pieces
3	175		**34560-185**	**24564-197**	**24564-198**	**24560-199**	**21101-853**	**24564-199**	**21101-954**
3	235		**34560-187**						
3	275	1)	**34579-300**						
3	277.75	2)	**34579-002**						
3	295		**34560-189**						
3	355		**34560-191**						
3	415		**34560-193**						
3	475		**34560-195**						
4	175	3)	**34560-285**	**24564-297**	**24564-298**	**24560-299**	**21101-858**	**24564-299**	**21101-954**
4	235	3)	**34560-287**						
4	295	3)	**34560-289**						
4	355	3)	**34560-291**						
4	415	3)	**34560-293**						
4	475	3)	**34560-295**						
6	175		**34560-485**	**24564-497**	**24564-498**	**24560-499**	**21101-855**	**24564-499**	**21101-954**
6	235		**34560-487**						
6	275	1)	**34579-038**						
6	277.75	2)	**34579-012**						
6	295		**34560-489**						
6	355		**34560-491**						
6	415		**34560-493**						
6	475		**34560-495**						
6	970		**34560-496**						
9	175		**34560-785**	**24564-797**	**24564-798**	**24560-799**	**21101-859**	**24564-799**	**21101-954**
9	235		**34560-787**						
9	295		**34560-789**						
9	355		**34560-791**						
9	415		**34560-793**						
Screw, M4 x 14, PU 100 pieces, for fastening horizontal rail to side panel			**24560-130**	**24560-130**	**24560-130**	**24560-130**	–	**24560-130**	–
Screw, M4 x 10, required if guide rails are screwed to slot 1, PU 100 pieces			**24560-155**	**24560-155**	**24560-155**	**24560-155**	–	**24560-155**	–

1) CompactPCI 2) VME64x 3) Grid holes of side panel 3 + 1 U

Side panels type H for stainless steel EMC gasket

Order Information

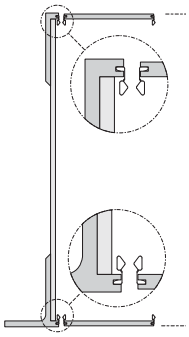 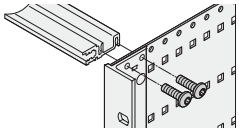 06108070 06108062	Side panel type H for stainless steel EMC gasket			Rear angle	Side panel connection
	without handle holes	with handle holes	EMC gasket (stainless steel)		
	06197004	06107001	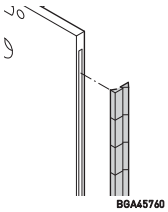 BGA45760	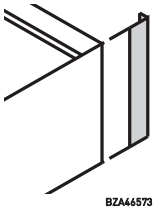 BZA46573	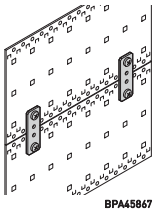 BPA45867
	for high mechanical demands, 19" bracket, tox-cold welded, Al, 2 mm, clear passivated, front anodised	for high mechanical demands, 19" bracket, tox-cold welded, Al, 2 mm, clear passivated, front anodised, please order front handles separately see page 6.27	inserted laterally into the grooves of the front panel	Al extrusion, surface clear passivated; with lateral grooves for stainless steel EMC gasekt; rear hood cannot be mounted simultaneously	Zn die-cast, incl. fixing material kit, for connecting two by two side panels (on top of each other)
Height U	Depth mm	PU 1 pair	PU 1 pair	PU 10 pieces	PU 1 pair	PU 4 pieces
3	175	24566-125	24567-125	21101-705	24561-198	21101-954
3	235	24566-127	24567-127			
3	275 1)	–	–			
3	277.75 2)	–	–			
3	295	24566-129	24567-129			
3	355	24566-131	24567-131			
3	415	–	–			
3	475	–	–			
4	175 3)	–	–	–	–	–
4	235 3)					
4	295 3)					
4	355 3)					
4	415 3)					
4	475 3)					
6	175	24566-425	24567-425	21101-707	24561-498	21101-954
6	235	24566-427	24567-427			
6	275 1)	–	–			
6	277.75 2)	–	–			
6	295	24566-429	24567-429			
6	355	24566-431	24567-431			
6	415	–	–			
6	475	–	–			
6	970	–	–			
9	175	–	–	–	–	–
9	235					
9	295					
9	355					
9	415					
Screw, M4 x 14, PU 100 pieces, for fastening horizontal rail to side panel		24560-130	24560-130	–	24560-130	–
Screw, M4 x 10, required if guide rails are screwed to slot 1, PU 100 pieces		24560-155	24560-155	–	24560-155	–

1) CompactPCI 2) VME64x 3) Grid holes of side panel 3 + 1 U

Subracks – europacPROServicePLUS

Side panels type H for textile EMC gasket

Order Information

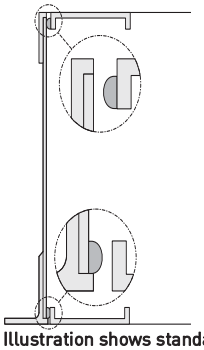

Illustration shows standard assembly, not VME or CompactPCI bus with rear I/O

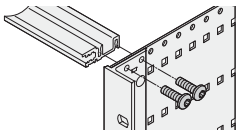

06108070 06108062

Height U	Depth mm		Side panel type H for textile EMC gasket: without handle holes	with handle holes	EMC gasket (textile)	Rear angle	Side panel connection
			06197004	06107001	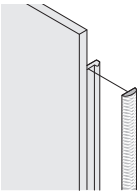 04602054	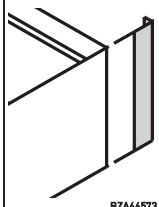 BZA46573	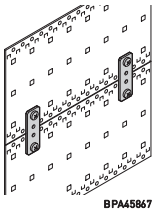 BPA45867
			for high mechanical demands, 19" bracket, tox-cold welded, Al, 2 mm, clear passivated, front anodised	for high mechanical demands, 19" bracket, tox-cold welded, Al, 2 mm, clear passivated, front anodised, please order front handles separately see page 6.27	textile gasket, core: foam, sleeve: textile cladding with CuNi coating, UL 94 V-0	Al extrusion, etched; for textile EMC gasket	Zn die-cast, incl. fixing material kit, for connecting two by two side panels (on top of each other)
U	mm		PU 1 pair	PU 1 pair	PU 10 pieces	PU 1 pair	PU 4 pieces
3	175		**24564-145**	**24566-145**	**21101-853**	**24564-199**	**21101-954**
3	235		**24564-147**	**24566-147**			
3	275	1)	–	–			
3	277.75	2)	–	–			
3	295		**24564-149**	**24566-149**			
3	355		**24564-151**	**24566-151**			
3	415		–	–			
3	475		–	–			
4	175	3)	–	–	–	–	–
4	235	3)					
4	295	3)					
4	355	3)					
4	415	3)					
4	475	3)					
6	175		**24564-445**	**24566-445**	**21101-855**	**24564-499**	**21101-954**
6	235		**24564-447**	**24566-447**			
6	275	1)	–	–			
6	277.75	2)	–	–			
6	295		**24564-449**	**24566-449**			
6	355		**24564-451**	**24566-451**			
6	415		–	–			
6	475		–	–			
6	970		–	–			
9	175		–	–	–	–	–
9	235						
9	295						
9	355						
9	415						
Screw, M4 x 14, PU 100 pieces, for fastening horizontal rail to side panel			**24560-130**	**24560-130**	–	**24560-130**	–
Screw, M4 x 10, required if guide rails are screwed to slot 1, PU 100 pieces			**24560-155**	**24560-155**	–	**24560-155**	–

1) CompactPCI 2) VME64x 3) Grid holes of side panel 3 + 1 U

Subracks – europac PRO ServicePLUS

Side panels type L

Order Information

Height U	Depth mm		Side panel type L	Front cover	Collar screw with slot for assembly of front cover	Sleeves for assembly of front cover	Side panel connection
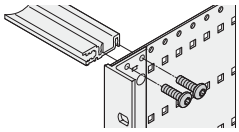 06108062			06197002	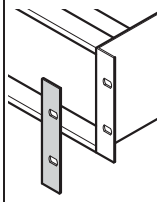 BZA45810	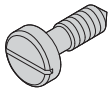 06708055	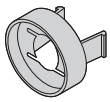 00508056	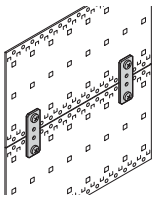 BPA45867
			Al, 2 mm, passivated	for decorative finish of 19" bracket, Al, 2 mm, anodised	M6 x 16, St, nickel-plated	PPE, black	Zn die-cast, incl. fixing material kit, for connecting two by two side panels (on top of each other)
			1 piece		PU 100 pieces	PU 100 pieces	PU 4 pieces
3	175		34561-185	34561-197	21100-565	21100-566	21101-954
3	235		34561-187				
3	275	1)	–				
3	277.75	2)	–				
3	295		34561-189				
3	355		–				
3	415		–				
3	475		–				
4	175	3)	–	–	–	–	–
4	235	3)					
4	295	3)					
4	355	3)					
4	415	3)					
4	475	3)					
6	175		34561-485	34561-497	21100-565	21100-566	21101-954
6	235		34561-487				
6	275	1)	–				
6	277.75	2)	–				
6	295		34561-489				
6	355		–				
6	415		–				
6	475		–				
6	970		–				
9	175		–	–	–	–	–
9	235						
9	295						
9	355						
9	415						
Screw, M4 x 14, PU 100 pieces, for fastening horizontal rail to side panel			24560-130	–	–	–	–
Screw, M4 x 10, required if guide rails are screwed to slot 1, PU 100 pieces			24560-155	–	–	–	–

1) CompactPCI 2) VME64x 3) Grid holes of side panel 3 + 1 U

Subracks – europacPROServicePLUS

Front handles, wall-mounting brackets

Order Information

				Front handle clear anodised	Front handle black anodised	Universal front handle	Wall-mounting bracket
				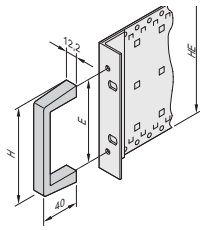 06102068 Al extrusion, anodised load-carrying capacity 30 kg		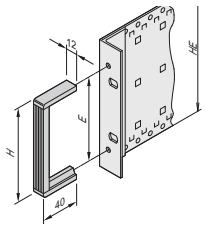 06102069 3 parts: Al extrusion, clear anodised, 2 end pieces, plastic, PA, black; width 12 mm, depth 40 mm load-carrying capacity 10 kg	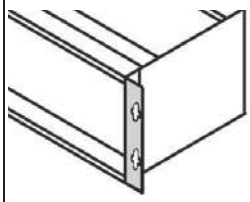 06104063 Al, 2.5 mm, passivated; bolted to subrack in place of the 19" bracket
Height U	Depth mm	H mm	E mm	1 piece (SPQ 10)[1]	1 piece (SPQ 10)[1]	1 piece (SPQ 10)[1]	PU 1 pair
3	175	102	88.0	**10501-005**	**10501-026**	**10502-057**	**24562-197**
3	235	102	88.0				
3	275	102	88.0				
3	277.75	102	88.0				
3	295	102	88.0				
3	355	102	88.0				
3	415	102	88.0				
3	475	102	88.0				
4	175	146	133.4	**10501-018**	–	**10502-060**	24562-297
4	235	146	133.4				
4	295	146	133.4				
4	355	146	133.4				
4	415	146	133.4				
4	475	146	133.4				
6	175	249	235.0	**10501-008**	**10501-029**	**10502-065**	**24562-497**
6	235	249	235.0				
6	275	249	235.0				
6	277.75	249	235.0				
6	295	249	235.0				
6	355	249	235.0				
6	415	249	235.0				
6	475	249	235.0				
6	970	249	235.0				
9	175	249	235.0	**10501-008**	**10501-029**	**10502-065**	24562-797
9	235	249	235.0				
9	295	249	235.0				
9	355	249	235.0				
9	415	249	235.0				
Screw M5 x 12, PU 100 pieces				**24560-183**	**24560-183**	**24560-183**	–
Screw M5 x 12, PU 4 pieces				**24560-182**	**24560-182**	**24560-182**	–
Screw, M4 x 14, PU 100 pieces				–	–	–	**24560-130**

1) SPQ (standard pack quantity): Part number includes 1 piece, but delivery is exclusively made in standard pack quantity (SPQ); please order at least the SPQ quantity or a multiple

Subracks – europacPROServicePLUS

Horizontal rails

06197007 light | 06197008 heavy | 06112004 rugged

- Aluminium profile, surface anodised, conductive contact surfaces for EMC gaskets
- The horizontal rail is marked with sequential numbering (for sizes > 28 HP) to facilitate positioning of the guide rails
- Horizontal rails are fixed to the side panel using M4 bolts with torx 20 drive
- There are 3 different horizontal rails for different loading levels
  - light, for up to 7.5 kg
  - heavy, for 7.5 kg to 15 kg
  - rugged, for 15 kg to approx. 60 kg

Mounting position of the horizontal rails

PCB as deep as side panel — front / rear

Cabling space behind backplane — front / rear

Rear I/O installation (CompactPCI, VME64x applications) — front / rear

3 U

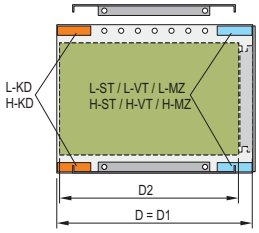

06112081

160, 220, 280 mm, ...

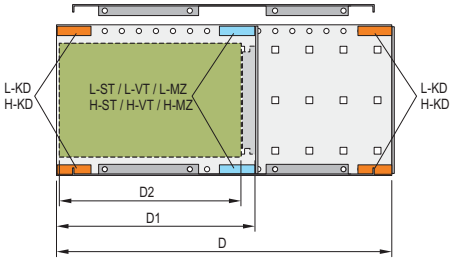

06112083

160, 220, 280 mm, ...

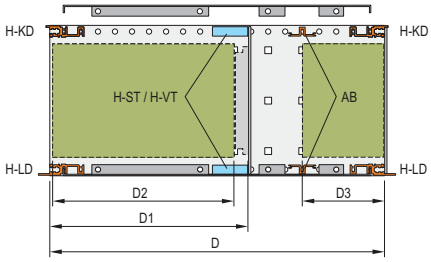

06112085

160 mm/80 mm

6 U = 3 U + 3 U

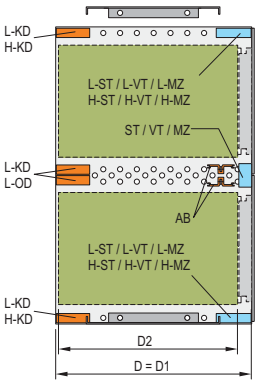

06112088

160, 220, 280 mm, ...

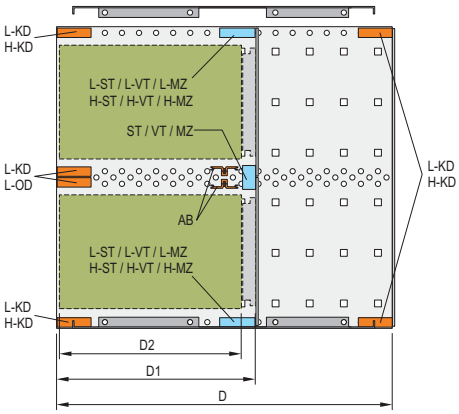

06112087

160, 220, 280 mm, ...

6 U

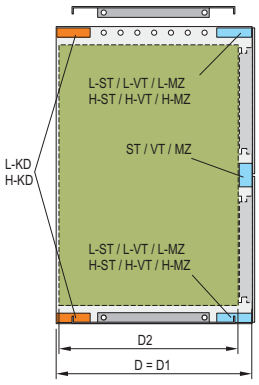

06112082

160, 220, 280 mm, ...

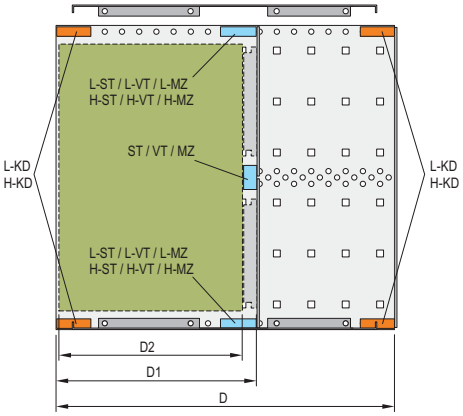

06112084

160, 220, 280 mm, ...

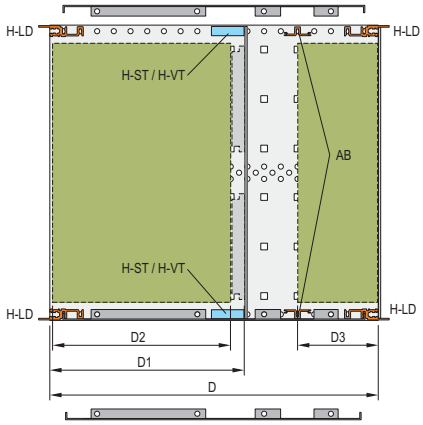

06112086

160 mm/80 mm

Subracks – europacPROServicePLUS

Front horizontal rails

Assembly 3 U, 2 x 3 U, 6 U

"light" (L)

06197007

"heavy" (H)

06197008

"heavy" (H)

06197009

3 U/6 U

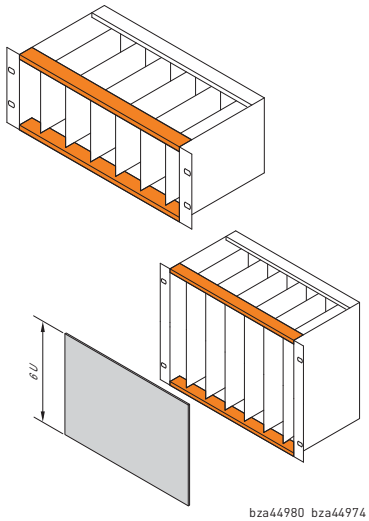

bza44980 bza44974

Short lip

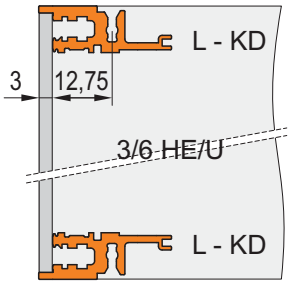

06105060

Short lip

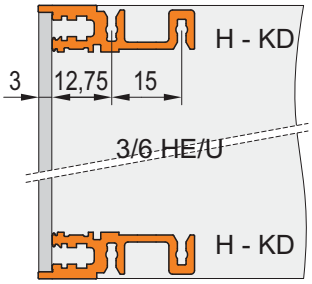

06105061

Long lip

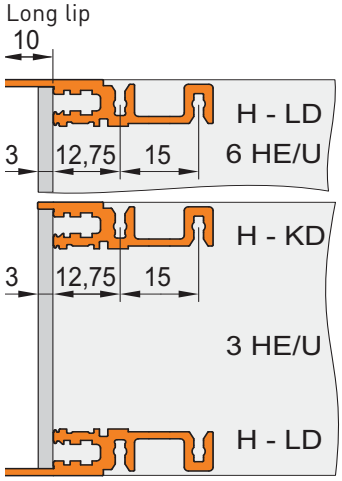

06108063

2 x 3 U

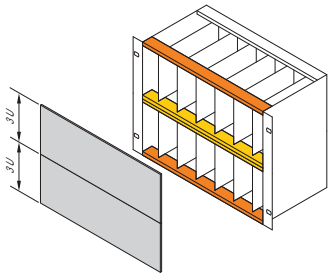

bza44972

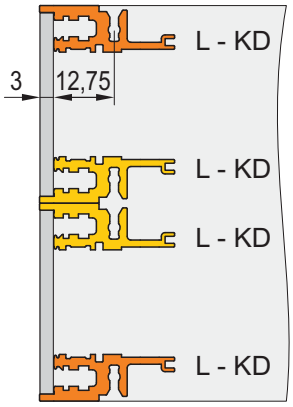

06105062

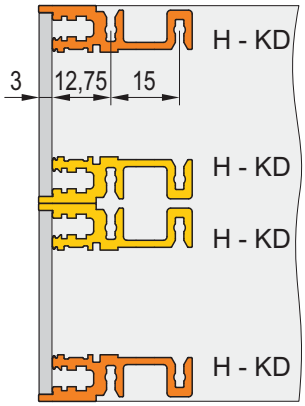

06105063

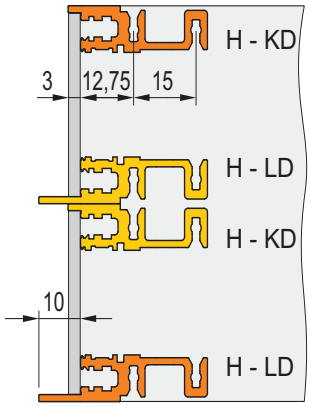

06108064

2 x 3 U, 6 U

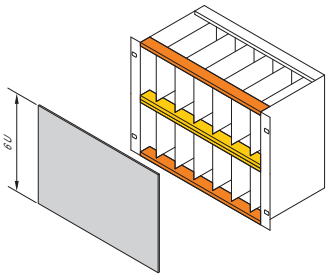

06105059

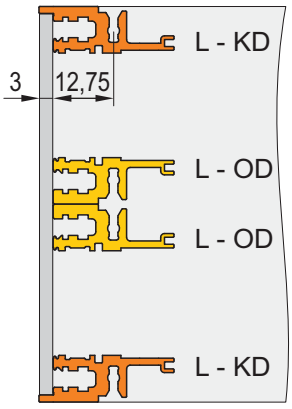

06105064

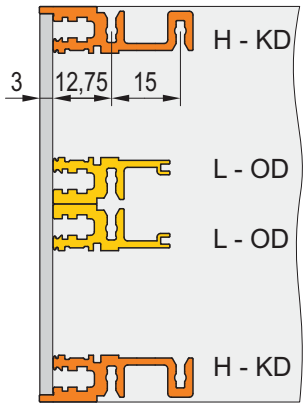

06105065

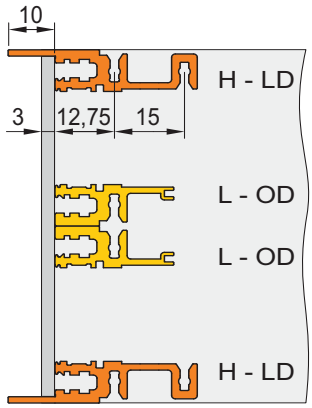

06108065

L-OD = Light - without lip, L-KD = Light - short lip, H-KD = Heavy - short lip, H-LD = Heavy - long lip

Subracks – europacPROServicePLUS

Front horizontal rails

Order Information

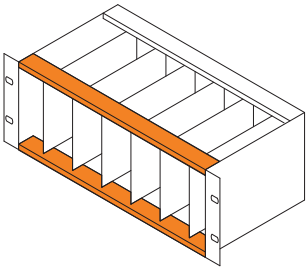 bza44980	"light" Type L-OD without lip 06197006	"light" Type L-KD short lip 06197007	"heavy" Type H-KD short lip 06197008	With long lip for insertion/ extraction of CompactPCI and VME64x boards "heavy" Type H-LD long lip 06197009
With HP markings from 28 HP, Al extrusion, anodised finish, conductive contact surface	Al extrusion, anodised finish, conductive contact surface, with printed HP markings without lip: 2 x 3 U installation and continuous 6 U front panel	Al extrusion, anodised finish, conductive contact surface, with printed HP markings short lip: horizontal rail and front panel form a single plane	Al extrusion, anodised finish, conductive contact surface, with printed HP markings short lip: horizontal rail and front panel form a single plane	Al extrusion, anodised finish, conductive contact surface, with printed HP markings long lip: for insertion/extraction of CompactPCI or VME64x boards
Usable length HP / Length mm	1 piece (SPQ 10)[1]	1 piece (SPQ 10)[1]	1 piece (SPQ 10)[1]	1 piece (SPQ 10)[1]
20 / 106.68	34560-020	34560-120	34560-220	34560-320
28 / 147.32	34560-028	34560-128	34560-228	34560-328
40 / 208.28	34560-040	34560-140	34560-240	34560-340
42 / 218.44	34560-042	34560-142	34560-242	34560-342
63 / 325.12	34560-063	34560-163	34560-263	34560-363
84 / 431.80	34560-084	34560-184	34560-284	34560-384
– / 1000	34560-001	34560-101	34560-201	34560-301
Screw, M4 x 14, PU 100 pieces	24560-130	24560-130	24560-130	24560-130
Screw, M4 x 10, required if guide rails are screwed to slot 1, PU 100 pieces	–	–	24560-155	24560-155
Threaded inserts see page	6.35	6.35	6.35	6.35

1) SPQ (standard pack quantity): Part number includes 1 piece, but delivery is exclusively made in standard pack quantity (SPQ); please order at least the SPQ quantity or a multiple
"light": loading capacity up to approx. 7.5 kg; "heavy": loading capacity > 7.5 kg

Note

- 1000 mm version without M4 thread to front, without printed markings and without notch for 19"-bracket
- Rugged horizontal rails with 3 fixing holes see section "Rugged Subracks", page 6.99

Subracks – europacPROServicePLUS

Rear horizontal rails

Indirect backplane mounting (with insulation strip)

04400001

Direct backplane mounting

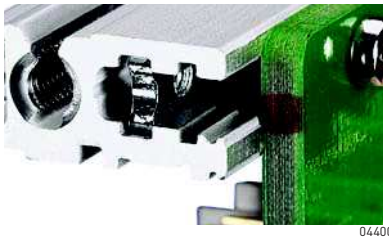

04400002

Connector fitting with Z

04400003

"light"

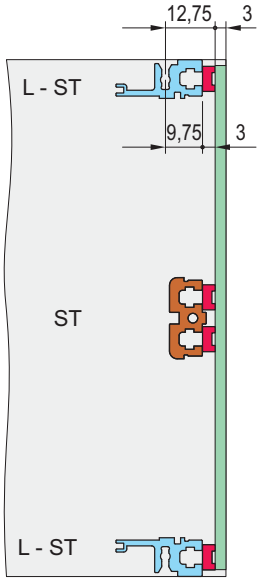

06105072

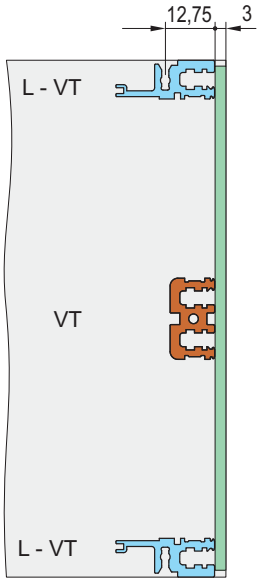

06105073

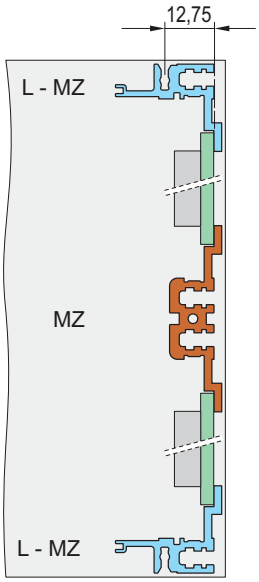

06105071

"heavy"

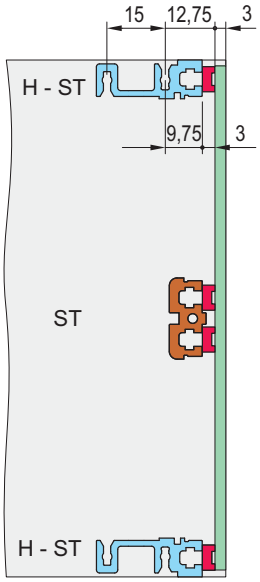

06108066

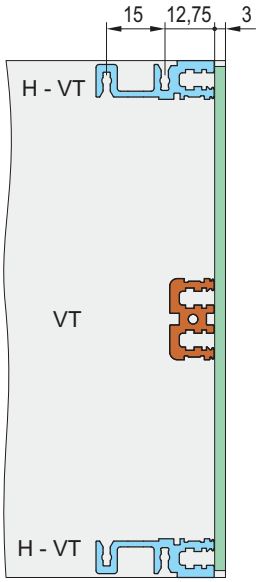

06108067

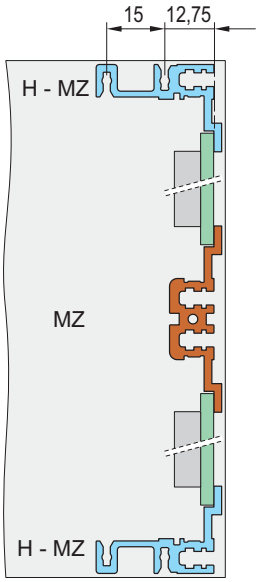

06108068

ST = standard, L = light, H = heavy

VT = depth-offset, L = light, H = heavy

MZ = with Z-rail, L = light, H = heavy

Subracks – europacPROServicePLUS

Rear horizontal rails, top and bottom

Order Information

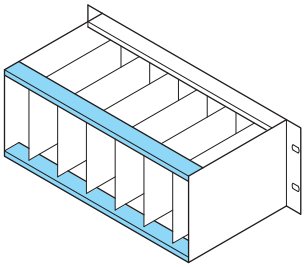

06105074

With HP markings from 28 HP, Al extrusion, anodised finish, conductive surface

		For indirect backplane mounting with insulation strip		For direct backplane mounting		For direct fixing of connectors in accordance with EN 60603-2 (DIN 41612)	
		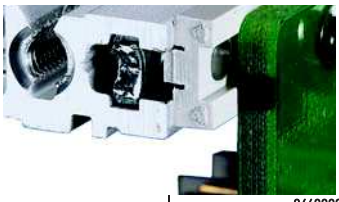 04400001		04400002		04400003	
		"light" Type L-ST standard	"heavy" Type H-ST standard	"light" Type L-VT + 3 mm	"heavy" Type H-VT + 3 mm	"light" Type L-MZ with Z-rail	"heavy" Type H-MZ with Z-rail
		06197010	06197011	06197011	06197009	06197014	06197015
		Al extrusion, anodised surface, conductive contact surface, with printed HP markings	Al extrusion, anodised surface, conductive contact surface, with printed HP markings	Al extrusion, anodised surface, conductive contact surface, with printed HP markings	Al extrusion, anodised surface, conductive contact surface, with printed HP markings	Al extrusion, anodised surface, conductive contact surface, with printed HP markings	Al extrusion, anodised surface, conductive contact surface, with printed HP markings
Usable length HP	**Length mm**	**1 piece (SPQ 10)[1)]**	**1 piece (SPQ 10)[1)]**	**1 piece (SPQ 10)[1)]**	**1 piece (SPQ 10)[1)]**	**1 piece (SPQ 10)[1)]**	**1 piece (SPQ 10)[1)]**
20	106.68	**34560-420**	**34560-520**	**34560-620**	**34560-720**	**34560-820**	**34560-920**
28	147.32	**34560-428**	**34560-528**	**34560-628**	**34560-728**	**34560-828**	**34560-928**
40	208.28	**34560-440**	**34560-540**	**34560-640**	**34560-740**	**34560-840**	**34560-940**
42	218.44	**34560-442**	**34560-542**	**34560-642**	**34560-742**	**34560-842**	**34560-942**
63	325.12	**34560-463**	**34560-563**	**34560-663**	**34560-763**	**34560-863**	**34560-963**
84	431.80	**34560-484**	**34560-584**	**34560-684**	**34560-784**	**34560-884**	**34560-984**
–	1000	**34560-401**	**34560-501**	**34560-601**	**34560-701**	**34560-801**	–
Screw, M4 x 14, PU 100 pieces, for fastening horizontal rail to side panel		**24560-130**	**24560-130**	**24560-130**	**24560-130**	**24560-130**	**24560-130**
Screw, M4 x 10, required if guide rails are screwed to slot 1, PU 100 pieces		–	**24560-155**	–	**24560-155**	–	**24560-155**
Perforated rail for connector mounting with insulation strip see page		6.36	6.36	–	–	–	–
Z-rail for connector mounting without insulation strip see page		6.36	6.36	–	–	–	–
Insulation strips see page		6.35	6.35	–	–	–	–
Threaded inserts see page		6.35	6.35	6.35	6.35	6.35	6.35

1) SPQ (standard pack quantity): Part number includes 1 piece, but delivery is exclusively made in standard pack quantity (SPQ); please order at least the SPQ quantity or a multiple
"light": loading capacity up to approx. 7.5 kg; "heavy": loading capacity > 7.5 kg

Note

- 1000 mm version without M4 thread to front, without printed markings and without notch for 19"-bracket
- Rugged horizontal rails with 3 fixing holes see section "Rugged Subracks", page 6.99

Subracks – europacPROServicePLUS

Rear horizontal rails, centre, for 6 U

Order Information

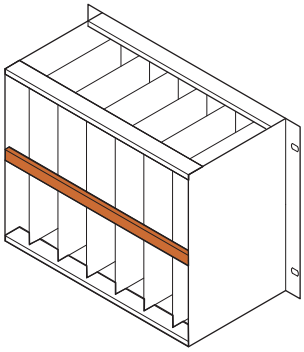 06108090		For indirect backplane mounting with insulation strip 04400001 Typ ST 06197016 Al extrusion, anodised surface, conductive contact surface, without printed markings	For direct backplane mounting 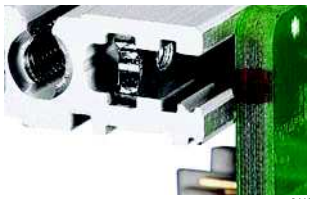 04400002 Typ VT 06197017 Al extrusion, anodised surface, conductive contact surface, without printed markings	For direct fixing of connectors in accordance with EN 60603-2 (DIN 41612) 04400003 Typ MZ 06197018 Al extrusion, anodised surface, conductive contact surface, without printed markings
Usable length HP	Length mm	1 piece (SPQ 10)[1]	1 piece (SPQ 10)[1]	1 piece (SPQ 10)[1]
20	106.68	**34561-020**	**34561-120**	**34561-220**
28	147.32	**34561-028**	**34561-128**	**34561-228**
40	208.28	**34561-040**	**34561-140**	**34561-240**
42	218.44	**34561-042**	**34561-142**	**34561-242**
63	325.12	**34561-063**	**34561-163**	**34561-263**
84	431.80	**34561-084**	**34561-184**	**34561-284**
–	1000	**34561-001**	**34561-101**	**34561-201**
Screw, M4 x 14, PU 100 pieces, for fastening horizontal rail to side panel		**24560-130**	**24560-130**	**24560-130**
Insulation strips see page		6.35	–	–
Threaded inserts see page		6.35	6.35	6.35

1) SPQ (standard pack quantity): Part number includes 1 piece, but delivery is exclusively made in standard pack quantity (SPQ); please order at least the SPQ quantity or a multiple
"light": loading capacity up to approx. 7.5 kg; "heavy": loading capacity > 7.5 kg

Note

- All horizontal rails without printed markings
- 1000 mm version without M4 thread to front

Subracks – europacPROServicePLUS

Horizontal rails (type AB) for rear I/O applications

Order Information

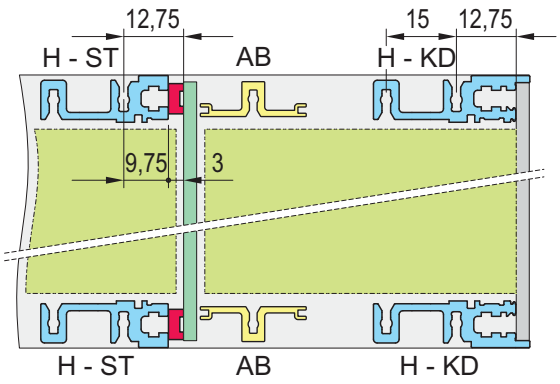

06108069

For CompactPCI in rear I/O area

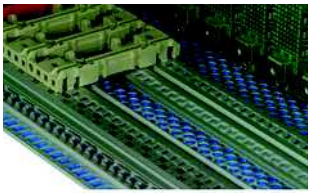

06108009

Typ AB

06197019

Al extrusion, anodised surface,
conductive contact surface;
horizontal rail type AB (AB = support)
is required to fix the 80 mm rear I/O boards;
without printed markings

Usable length HP	Length mm	1 piece (SPQ 10)[1]
20	106.68	**34561-520**
28	147.32	**34561-528**
40	208.28	**34561-540**
42	218.44	**34561-542**
63	325.12	**34561-563**
84	431.80	**34561-584**
–	1000	**34561-501**
Screw, M4 x 14, PU 100 pieces, for fastening horizontal rail to side panel		**24560-130**

1) SPQ (standard pack quantity): Part number includes 1 piece, but delivery is exclusively made in standard pack quantity (SPQ); please order at least the SPQ quantity or a multiple
"light": loading capacity up to approx. 7.5 kg; "heavy": loading capacity > 7.5 kg

Note

- All horizontal rails without printed markings
- 1000 mm version without M4 thread to front

Subracks – europacPROServicePLUS

Threaded inserts, perforated strips, insulation strips

Order Information

	Threaded insert			Perforated strip		Insulation strip	
		M2.5	M3		(item 1)		
	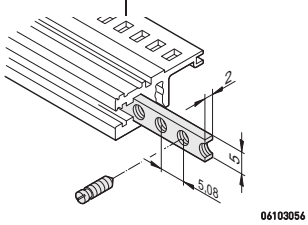 required for fixing the front panel to the horizontal rail; St, zinc-plated; use collar screw 12.3 mm, see page 6.66			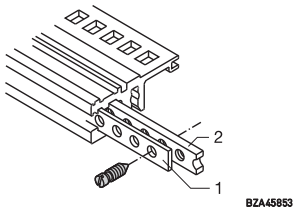 for centring shielded plug-in units, Al, 1 mm, please order grub screw separately		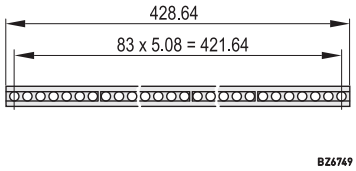 for insulated backplane mounting; PBT UL 94 V-0, grey	
Usable length HP	Threaded insert Length mm	1 piece (SPQ 10)[1]	1 piece (SPQ 10)[1]	Perforated strip Length mm	1 piece (SPQ 10)[1]	Insulation strip Length mm	PU 10 pieces
20	106.18	**34561-320**	–	106.48	**30845-189**	101.50	**24560-820**
28	146.82	**34561-328**	–	147.12	**30845-197**	144.20	**24560-828**
40	207.78	**34561-340**	–	208.08	**30845-209**	205.12	**24560-840**
42	217.94	**34561-342**	–	218.24	**30845-211**	210.40	**24560-842**
63	324.62	**34561-363**	–	324.92	**30845-232**	316.88	**24560-863**
84	431.30	**34561-384**	**34561-484**	431.60	**30845-253**	428.64	**24560-884**
196	1000.26	**34565-196**	–	1000.56	**34565-396**		–
Accessories							
Grub screw M2.5 x 8, PU 100 pieces		**21100-276**	–		–		–
Grub screw M2.5 x 9, PU 100 pieces		–	–		**21101-359**		–
Grub screw M3 x 8, PU 100 pieces		–	**21100-646**		–		–

1) SPQ (standard pack quantity): Part number includes 1 piece, but delivery is exclusively made in standard pack quantity (SPQ); please order at least the SPQ quantity or a multiple

2) Part no. includes one packing unit (PU); delivery is exclusively made in PU

Subracks – europac PRO ServicePLUS

Z-rails, perforated rails

Order Information

		Z-rail for connectors		Perforated rail
		DIN EN 60603-2, DIN 41612 item 1	31-pin, DIN 41617	EN 606032, DIN 41612 item 1
		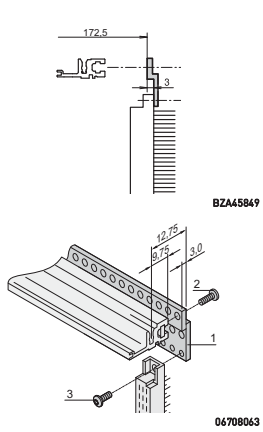	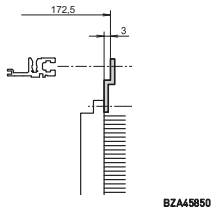	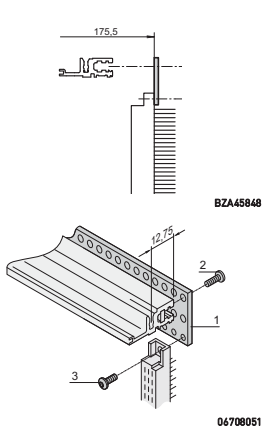
		for connector mounting on ST horizontal rails, please order threaded inserts and screw separately	for connector mounting on ST horizontal rails, please order threaded inserts and screw separately	for connector mounting on VT horizontal rails, please order threaded inserts and screw separately
Usable length HP	Length mm	1 piece	1 piece	PU 4 pieces
20	101.60	30822-025	–	20822-051
28	142.24	30822-033	–	20822-049
40	203.20	30822-045	30819-763	20822-046
42	213.36	30822-047	–	20822-050
60	304.80	30822-065	30819-783	20822-047
84	426.72	30822-089	30819-808	20822-048
Item 3, torx panhead screw to fix connector to perforated rail,, M2.5 × 7, PU 100 pieces		24560-147	24560-147	24560-147
Item 2, torx panhead screw, to fix perforated rails to horizontal rail, M2.5 × 10, PU 100 pieces		24560-148	24560-148	24560-148

Subracks – europacPROServicePLUS

Guide rails

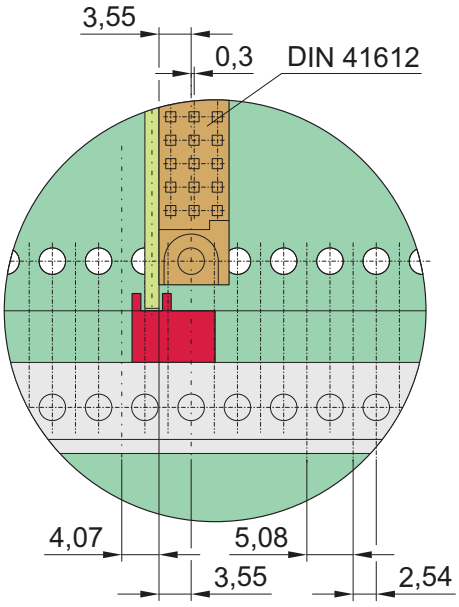

Front view: position of guide rails to connector (EN 60603-2/ DIN 41612)

Guide rails form the interface between the subrack mechanics and the sub-assemblies (PCBs, plug-in units, frame-type plug-in units, ...).

Guide rails for standard applications are 2 HP wide. Guide rails with coding (e.g. for CompactPCI or VME64bus applications) are 4 HP wide.

There are groove widths of 2 mm and 2.5 mm.

The guide rails are clipped into the rectangular cut-outs of the horizontal rails. They can additionally be bolted to the horizontal rail (type H only) for higher shock and vibration requirements.

The printed HP markings on the horizontal rail (28 HP and above) allow the rails to be fitted in the correct position easily (position of sub-assembly = "number in viewing window" or in front of the arrow
marking on the guide rails).

Applications for guide rails

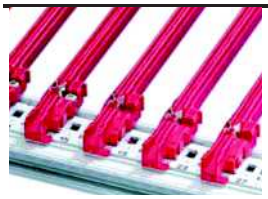
06102001

For plug-in units and frame-type plug-in units (with front panels) (standard type)

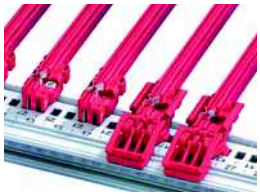
06102002

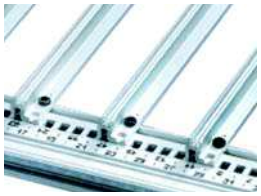
06102005

For plug-in units and frame type plug-in units or for PCBs without their own front panel (accessory type or robust version)

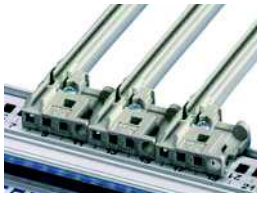
06106001

For CompactPCI or VME64x plug-in units (type IEEE with coding; frame-type plug-in units cannot be fitted)

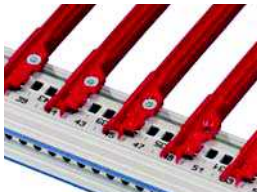
06104009

For plug-in drive unit modules or PCBs in 4.4" (111.7 mm) height (type 4.4")

06112022

Rugged guide rails to accommodate conduction cooled assembly (CCA) adaptor

Accessories:
- ESD clip
- Keying/coding pegs
- Board locking

Subracks – europacPROServicePLUS

Guide rails for plug-in units and modules, one-piece, groove width 2 mm and 2.5 mm

Order Information

Assembly
- can be clipped into Al extruded horizontal rails
- can be clipped into 1.5 mm thick plates

Storage temperature
from -40 °C ... 130 °C

For plug-in units and frame type plug-in units

standard type

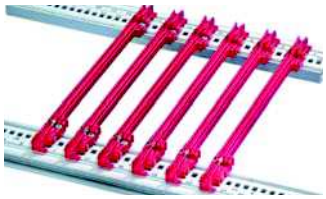

06102001

standard type, with DIN connector fixing

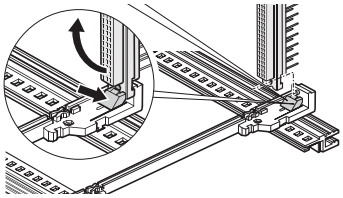

06101501

Board length mm	Groove width mm	Colour mm	up to 220 mm length, PBT, UL 94 V-0; from 280 mm length, multi-piece, end piece PBT, UL 94 V-0, central section Al extrusion PU 10 pieces[2]	PBT, UL 94 V-0 1 piece (SPQ 50)[1]	PBT, UL 94 V-0, red, connector is clipped directly onto the guide rails; for euroboards only, 100 x 160 mm or 100 x 220 mm 1 pair (SPQ 10)[1]
70	2	red	–	34579-230	–
70	2	grey	–	34579-231	–
160	2	red	24560-351	64560-001	64560-074
220	2	red	24560-353	64560-002	64560-075
280	2	red	24560-379	–	–
340	2	red	24560-380	–	–
160	2.5	red	–	64560-096	–
220	2.5	red	–	64560-098	–

Accessories

Retention screw, PU 100 pieces; Torque max. 0.2 Nm 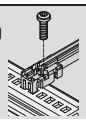	24560-141	–	24560-141
ESD clip, PU 50 pieces	24560-255		24560-255

1) SPQ (standard pack quantity): Part number includes 1 piece, but delivery is exclusively made in standard pack quantity (SPQ); please order at least the SPQ quantity or a multiple

2) Part no. includes one packing unit (PU); delivery is exclusively made in PU

Description of accessories see from page 6.43

Subracks – europacPROServicePLUS

Guide rails type "accessory", one-piece, groove width 2 mm and 2.5 mm

Order Information

Assembly
- can be clipped into Al extruded horizontal rails
- can be clipped into 1.5 mm thick plates

Storage temperature
from -40 °C ... +130 °C

Board length mm	Groove width mm	Colour	Guide rails: accessory type		"Accessories" with DIN connector mounting	accessory type, strengthened	for heavy modules, Al extrusion, silver, robust version
			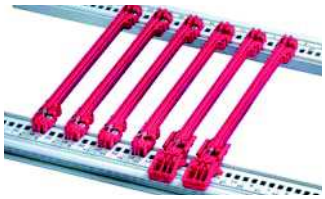 06102002		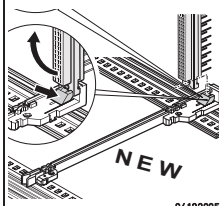 06102005	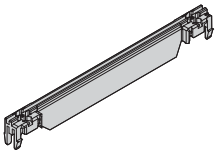 06102005	06102005
			up to 280 mm length, PBT, UL 94 V-0; > 280 mm length, multi-piece, end piece PBT, UL 94 V-0, middle section Al extrusion		PBT, UL 94 V-0, connector is bolted directly onto the guide rails, only suitable for euroboards 100 x 160 mm or 100 x 220 mm	PBT UL 94 V-0, red; support beam of guide rails adds to strengthening	Al extrusion; is screwed to horizontal rail "heavy" with retention screws
mm	mm		PU 10 pieces[2]	1 piece (SPQ 50)	PU 10 pairs[2]	1 piece (SPQ 50)	1 piece (SPQ 10)[1]
100	2	red	–	**64560-082**	–	–	–
160	2	red	**24560-373**	**64560-005**	24560-274	**64560-076**	–
160	2	grey/silver	–	**64560-055**	24560-276	–	**34562-881**
220	2	red	**24560-374**	**64560-006**	24560-275	**64560-078**	–
220	2	grey/silver	–	**64560-166**	24560-277	–	**34562-882**
280	2	red/silver	**24560-375**	–	–	**64560-080**	**34562-883**
340	2	red/silver	**24560-376**	–	–	–	**34562-884**
400	2	red/silver	–	–	–	–	**34562-885**
160	2.5	silver	–	–	–	–	**34564-881**
220	2.5	silver	–	–	–	–	**34564-882**
280	2.5	silver	–	–	–	–	**34564-883**
340	2.5	silver	–	–	–	–	**34564-884**
400	2.5	silver	–	–	–	–	**34564-885**

Accessories

Retention screw, PU 100 pieces; torque max. 0.2 Nm 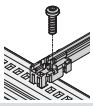	**24560-141**	**24560-141**	**24560-141**	**24560-141**	**24560-157**
ESD clip, PU 50 pieces	**24560-255**	**24560-255**	**24560-255**	**24560-255**	–
Board locking, red, PU 10 pieces	**24560-377**	**24560-377**	**24560-377**	**24560-377**	–
Board handle, red, PU 10 pieces	**24560-378**	**24560-378**	**24560-378**	**24560-378**	–
Identification strips for board handle, red, PU 1 sheet = 438 pieces	**60817-228**	**60817-228**	**60817-228**	**60817-228**	–
Coding see page	6.43				–

1) SPQ (standard pack quantity): Part number includes 1 piece, but delivery is exclusively made in standard pack quantity (SPQ); please order at least the SPQ quantity or a multiple

2) Part no. includes one packing unit (PU); delivery is exclusively made in PU

Description of accessories see from page 6.43

Subracks – europacPROServicePLUS

Guide rails for CompactPCI, VME64x with coding, 4.4" PCBs, groove width 2 mm and 2.5 mm

Order Information

Assembly
- can be clipped into Al extruded horizontal rails
- can be clipped into1.5 mm thick plates

Storage temperature
from -40 °C ... 130 °C

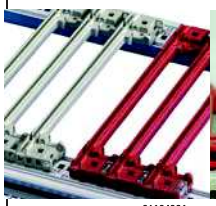
06106001

04611009

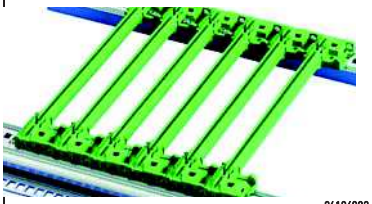
06106002

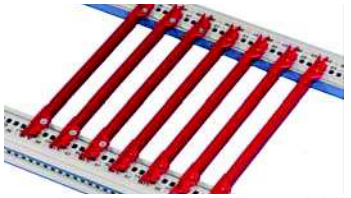
06104009

Board length mm	Groove width mm	Colour mm	For CompactPCI, VME64x with coding – In accordance with IEEE 1101.10 and IEC 60297-3-103: One-piece for groove width 2 mm, PBT, UL 94 V-0; multi-piece at groove width 2,5 mm, end-piece PBT, UL 94 V-0, center piece Al – PU 10 pieces	1 piece (SPQ 50)[1]	For CompactPCI, VME64x with coding – Offset 0.1" for power supply units in accordance with IEEE 1101.10 and IEC 60297-3-103: PBT, UL 94 V-0, for installation of power supplies in CompactPCI systems or plug-in units with SMD placement – PU 10 pieces	1 piece (SPQ 50)[1]	For 4.4" PCBs: One-piece, PBT, UL 94 V-0; for 4.4" PCBs or drive unit modules – PU 10 pieces	1 piece (SPQ 50)[1]
70	2	red	24560-355	64560-085	–	–	–	–
70	2	grey	24560-360	64560-086	–	–	–	–
160	2	red	24560-356	64560-089	–	–	24560-361	64560-143
160	2	grey	24560-358	64560-090	–	–	–	–
160	2	green	–	–	24560-359	64560-071	–	–
220	2	red	–	64560-091	–	–	24560-362	64560-144
220	2	grey	–	64560-092	–	–	–	–
220	2	green	–	–	–	64560-072	–	–
160	2.5	red	–	–	–	–	–	64560-145
220	2.5	red	24561-330	–	–	–	–	64560-146
220	2.5	grey	24561-340	–	–	–	–	–
280	2.5	red	24561-331	–	–	–	–	–
280	2.5	grey	24561-341	–	–	–	–	–
340	2.5	red	24561-332	–	–	–	–	–
340	2.5	grey	24561-342	–	–	–	–	–

Accessories

ESD clip, PU 50 pieces	24560-255	24560-255	–	–	–	–
ESD clips, for alignment pin, PU 50 pieces	24560-256	24560-256	24560-256	24560-256	–	–
Retention screw, PU 100 pieces; torque max. 0.2 Nm	24560-141	24560-141	24560-141	24560-141	24560-158	24560-158
Coding peg, PU 100 pieces	20817-501	20817-501	20817-501	20817-501	–	–

1) SPQ (standard pack quantity): Part number includes 1 piece, but delivery is exclusively made in standard pack quantity (SPQ); please order at least the SPQ quantity or a multiple

2) Part no. includes one packing unit (PU); delivery is exclusively made in PU

Description of accessories see from page 6.43

Subracks – europacPROServicePLUS

Guide rails, multi-piece, groove width 2 mm

Order Information

PCBs:
Fixed lengths for 160, 220, 280, 340 mm; length 1000 mm for special dimensions

Mounting: pluggable into horizontal rails

Storage temperature :
End piece -40°C ... +130°C
PVC profile 0°C ... +60°C

			For plug-in units and modules standard type		Accessories type		For 4.4" PCBs	
			06106004		06106005		06106006	
			end piece, PBT, UL 94 V-0, middle section Al extrusion	end piece, PBT, UL 94 V-0, middle section plastic extrusion (PVC, RAL 7035)	end piece, PBT, UL 94 V-0, middle section Al extrusion	end piece, PBT, UL 94 V-0, middle section plastic extrusion (PVC, RAL 7035)	end piece, PBT, UL 94 V-0, middle section Al extrusion	end piece, PBT, UL 94 V-0, middle section plastic extrusion (PVC, RAL 7035)
Description	**Length mm**	**Groove width mm**	**1 piece (SPQ 10)[1)]**	**1 piece (SPQ 10)[1)]**	**1 piece (SPQ 10)[1)]**	**1 piece (SPQ 10)[1)]**	**1 piece (SPQ 10)[1)]**	**1 piece (SPQ 10)[1)]**
End piece, red, 1 pair		2	**64560-004**	**64560-004**	**64560-008**	**64560-008**	**64560-057**	**64560-057**
Al extrusion, for 160 mm board length	95	2	**34560-891**	**34564-891**	**34560-891**	**34564-891**	**34560-891**	**34564-891**
Al extrusion, for 220 mm board length	155	2	**34560-892**	**34564-892**	**34560-892**	**34564-892**	**34560-892**	**34564-892**
Al extrusion, for 280 mm board length	215	2	**34560-893**	**34564-893**	**34560-893**	**34564-893**	**34560-893**	**34564-893**
Al extrusion, for 340 mm board length	275	2	**34560-894**	–	**34560-894**	–	**34560-894**	–
Al extrusion, for any board length	1000	2	**34560-900**	–	**34560-900**	–	**34560-900**	–
Plastic extrusion, for any board length	1000	2	–	**34564-900**	–	**34564-900**	–	**34564-900**

Accessories

ESD clip, PU 50 pieces	**24560-255**	**24560-255**	**24560-255**	**24560-255**	–	–
Retention screw, PU 100 pieces; torque max. 0.2 Nm	**24560-141**	**24560-141**	**24560-141**	**24560-141**	**24560-158**	**24560-158**
Board locking, red, PU 10 pieces	–	–	**24560-377**	**24560-377**	–	–
Board handle, red, PU 10 pieces	–	–	**24560-378**	**24560-378**	–	–
Identification strips for board handle, red, PU 1 sheet = 438 pieces	–	–	**60817-228**	**60817-228**	–	–
Coding see page	–	–	see page 6.43		–	–

1) SPQ (standard pack quantity): Part number includes 1 piece, but delivery is exclusively made in standard pack quantity (SPQ); please order at least the SPQ quantity or a multiple

2) Part no. includes one packing unit (PU); delivery is exclusively made in PU

Description of accessories see from page 6.43

Note

- Strengthening for middle section (plastic extrusion) available on request

Subracks – europacPROServicePLUS

Dimension drawings of guide rails

Standard

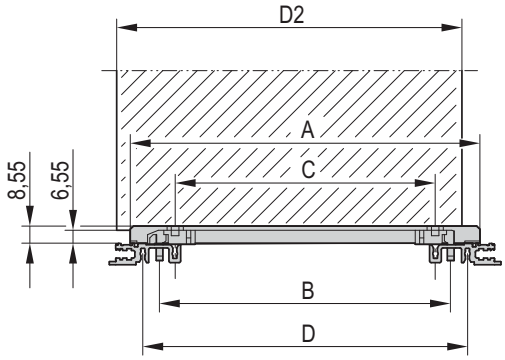

bza45808

Robust version

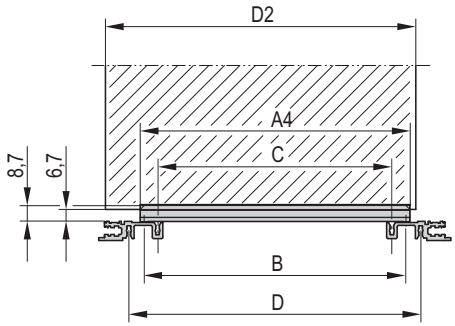

06105074

For accessories

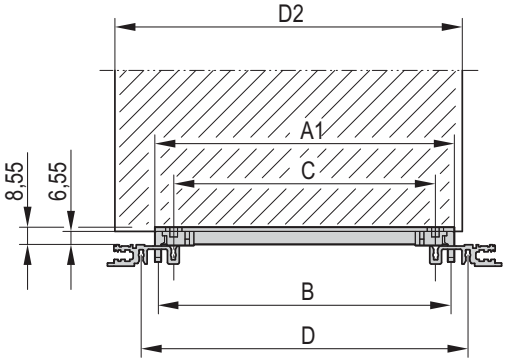

bza45808

For accessories, strengthened

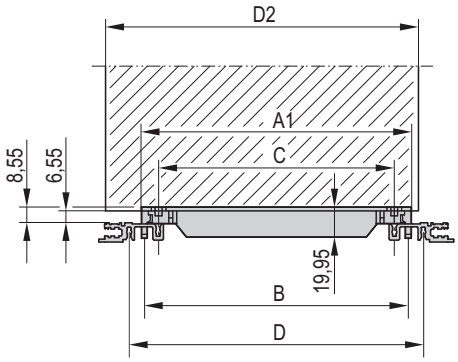

bza46552

CompactPCI, VME64x

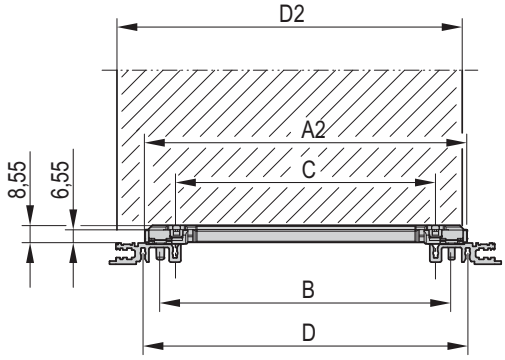

06105068

4.4" (111.7 mm)

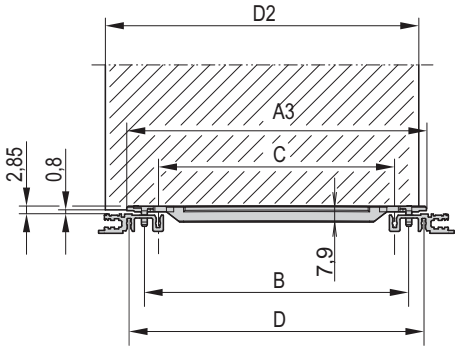

06105069

Dimensions table

Board length	Dimensions							
L	A	A1	A2	A3	A4	B	C	D
mm	mm	mm	mm	mm	mm	mm	mm	mm
70	71.5	47.9	59.39	63	49	45	30	60
100	101.5	77.9	89.39	93	79	75	60	90
160	161.5	137.9	149.39	153	139	135	120	150
220	221.5	197.9	209.39	213	199	195	180	210
280	281.5	257.9	269.39	273	259	255	240	270
340	341.5	317.9	322.39	333	319	315	300	330
400	401.5	377.9	389.39	393	379	375	360	390

A, A1, A2, A3, A4: Length of rail
B: Pitch of snap-in fixing
C: Pitch of guide rail retention screws
D: Pitch of horizontal rail retention screws

Subracks – europacPROServicePLUS

Guide rail accessories

Order Information

Assembly	Colour	ESD clips, CompactPCI/VME 64 alignment pin for guide rails	Coding for subracks: Keying/coding block for guide rails accessory type	Coding for subracks: Keying/coding for CompactPCI, VME64x handles to IEEE 1011.10 and IEC 60297-3-103
		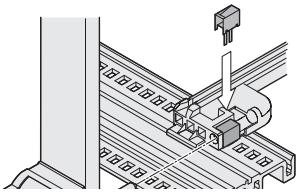 06103052	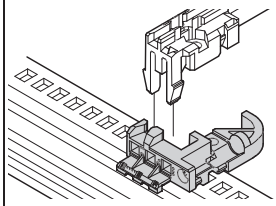 06103051	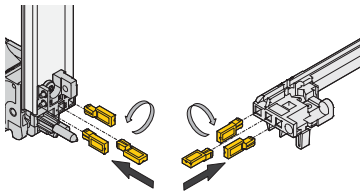 04612052
		Spring steel, tin-plated, ESD clip, for alignment pin in accordance with IEEE; can be plugged into the guide rails with coding and into the keying/coding block; provides conductive contact between the alignment pin of the insertion/extractor handle (IEL or IET handle) and the horizontal rail	PBT, UL 94 V-0, keying/coding block is clipped into the horizontal rail next to the guide rail; please order keying/coding pegs separately	Keying/coding peg, PBTP, UL 94 V-0, RAL 7035 The keying/coding pegs prevent plug-in units to be mounted in wrong slots. They are inserted in the chambers of the codable card guides as well as in the insertion/extractor handles IEL or IET (4 possible positions), resulting in 64 codings per card guide; when coding the upper and lower card guide, 4096 codings will result;
		PU 50 pieces	1 piece (SPQ 50)	PU 100 pieces
above	red	–	**34579-232**	–
	grey	–	**34579-233**	**20817-501**
	silver	**24560-256**	–	–
below	red	–	**34579-234**	–
	grey	–	**34579-235**	**20817-501**
	silver	**24560-256**	–	–

1) SPQ (standard pack quantity): Part number includes 1 piece, but delivery is exclusively made in standard pack quantity (SPQ); please order at least the SPQ quantity or a multiple

2) Part no. includes one packing unit (PU); delivery is exclusively made in PU

Guide rail accessories

Order Information

Assembly / Colour / mm	ESD clips for guide rails	Board locking for PCBs without front panel; for accessory type guide rails	PCB handle for board locking; for accessory type guide rails	Identification strips
	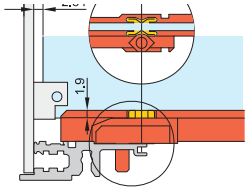 04503050	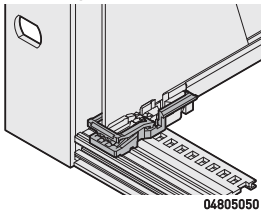 04805050	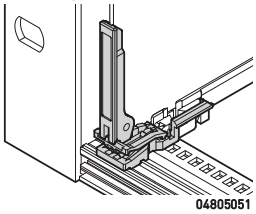 04805051	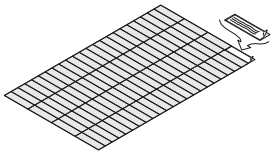 06108076
	Spring steel, tin-plated, provides conductive contact between board and horizontal rail, on both the solder side and the component side	PBT, UL 94 V-0, red, to fix the PCB in the subrack (also slot 1), can also be used without board handle, minimum distance 3 HP	PBT, UL 94 V-0, red, insertion/extraction function with connection to board locking (also slot 1), mounting directly behind front panel (above and below), minimum distance 3 HP	Polyester film, 31 x 4 mm, self-adhesive, white/matt (1 A4 sheet contains 438 pieces)
	silver	**red**	**red**	**white/matt**
	PU 50 pieces	PU 10 pieces	PU 10 pieces	1 piece
above/below	**24560-255**	**24560-377**	**24560-378**	**60817-228**

Subracks – europacPROServicePLUS

Shielding for top and bottom

Cover plates can be used for electromagnetic shielding (with EMC contact springs) or as mechanical protection (without EMC springs)

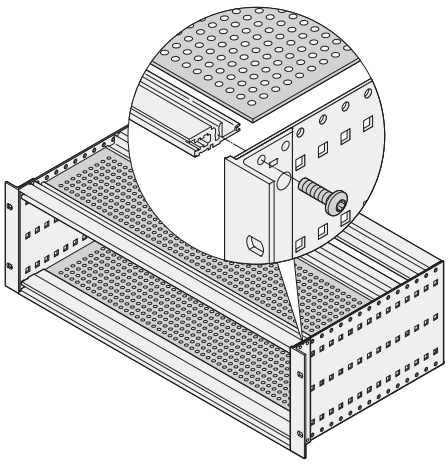

06108077

Cover plates for mechanical protection

- Cover plates are inserted into the grooves of the front and rear horizontal rails, type L "light"

see page 6.45

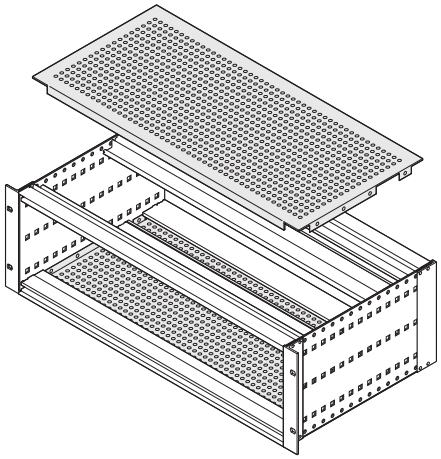

06102084

Cover plates with EMC shielding and mechanical protection

EMC cover plates for top and bottom

- Inserted in the groove of the front and rear horizontal rails; shielding with contact springs, lateral contact by bolting the bracket to the side panel
- Used when standard-depth PCBs (160, 220, 280, ...) are fitted

see page 6.46

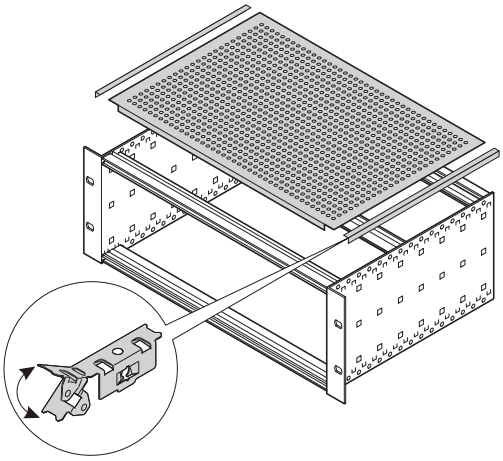

06105082

Universal EMC cover plates for top and bottom

- Inserted in the groove of the front and rear horizontal rails; shielding with contact springs, lateral contact by bolting to the side panel with special contact springs
- Used when PCBs with special dimensions are fitted

see page 6.47

Subracks – europacPROServicePLUS

Cover plates for mechanical protection (insertion into horizontal rail type L

Order Information

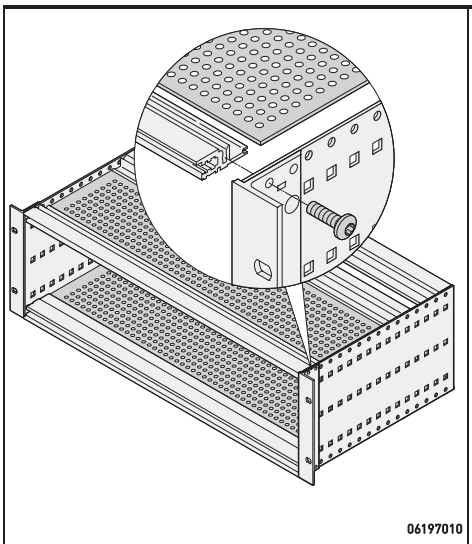

Cover plates for insertion into horizontal rail type L

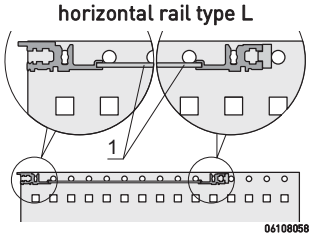

Perforated Al plate, 1.2 mm, hole diameter 3.8 mm, Al, untreated, perforation degree 60 %; for insertion into the groove of the light horizontal rails (type L)

Width HP	Depth mm	Application	PU 1 pair
42	175	160 mm board depth	**24561-031**
63	175	160 mm board depth	**24561-041**
84	175	160 mm board depth	**24561-051**
84	235	220 mm board depth	**24561-052**

Note

- Other dimensions on request

Subracks – europacPROServicePLUS

EMC cover plates and mechanical protection

- Cover plate for bolting to side panel
- Used when standard-depth PCBs (160, 220, 280, ...) are fitted

Order Information

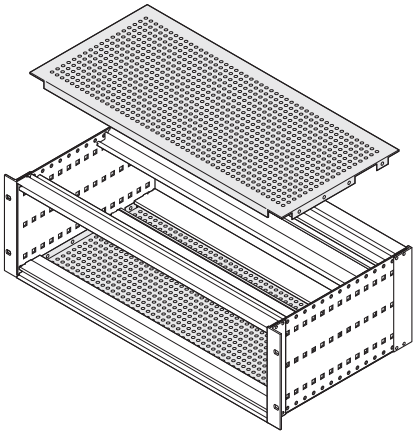

06197010

Cover plate for bolting to side panel

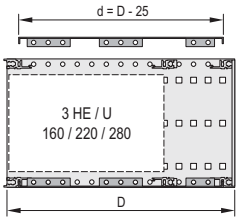

06102082

Al, 1.0 mm, hole diameter 4.0 mm, passivated, perforation degree 58 %, incl. fixing screws; for shielding 4 stainless steel EMC gaskets are required per subrack

Stainless steel EMC gasket, between cover plate and horizontal rail

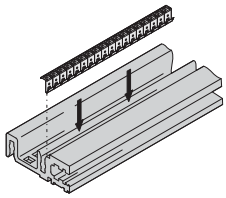

06106052

stainless steel EMC gasket, clips into the horizontal rail and forms the contact with the cover plate; suitable for all horizontal rails

Width HP	Depth mm	Application	PU 1 pair	PU 10 pieces	PU 100 pieces
42	175	160 mm board depth	24560-064	24560-241	–
42	235	160, 220 mm board depth	24560-065		
42	275	160, 220 mm board depth CompactPCI (275 mm)	24560-061		
42	277.75	160, 220 mm board depth VME64x (277.75 mm)	24579-090		
42	295	160, 220, 280 mm board depth	24560-066		
63	175	160 mm board depth	24560-071	24560-243	–
63	235	160, 220 mm board depth	24560-072		
63	275	160, 220 mm board depth CompactPCI (275 mm)	24560-062		
63	295	160, 220, 280 mm board depth	24560-073		
84	175	160 mm board depth	24560-078	24560-245	24560-246
84	235	160, 220 mm board depth	24560-079		
84	275	160, 220 mm board depth CompactPCI (275 mm)	24560-063		
84	277.75	160, 220 mm board depth VME64x (277.75 mm)	24579-092		
84	295	160, 220, 280 mm board depth	24560-080		
84	355	160, 220, 280 mm board depth	24560-081		
84	415	160, 220, 280 mm board depth	24560-082		
84	475	160, 220, 280 mm board depth	24560-083		
Assembly tool, for EMC gasket, stainless steel (horizontal rails), 1 piece 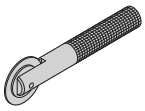			–	24560-271	

Note

- Cover plates without perforation available on request

Subracks – europacPROServicePLUS

Universal EMC cover plates and mechanical protection

- Used when PCBs with special dimensions are fitted

Order Information

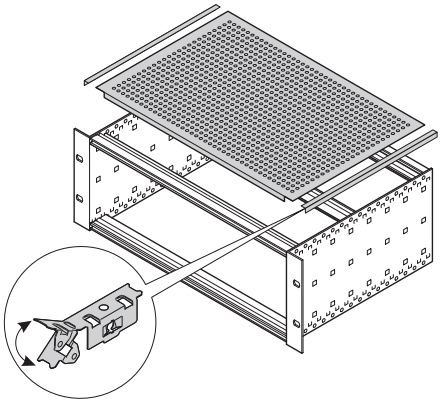

06105082

Universal cover plate

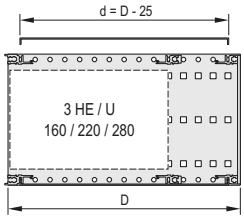

06108079

Al, 1.0 mm, hole diameter 4.0 mm, passivated, perforation degree 58 %, incl. lateral EMC sealing, incl. fixing screws

Stainless steel EMC gasket, between cover plate and horizontal rail

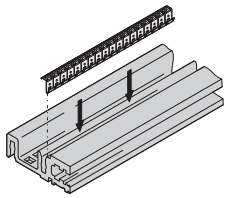

06106052

stainless steel EMC gasket, clips into the horizontal rail and forms the contact with the cover plate; suitable for all horizontal rails

Width HP	Depth mm	Application	PU 1 pair	PU 10 pieces	PU 100 pieces
42	175	160 mm board depth	**24560-031**	**24560-241**	–
42	235	160, 220 mm board depth	**24560-032**		
42	295	160, 220, 280 mm board depth	**24560-033**		
63	175	160 mm board depth	**24560-041**	**24560-243**	–
63	235	160, 220 mm board depth	**24560-042**		
63	295	160, 220, 280 mm board depth	**24560-043**		
84	175	160 mm board depth	**24560-051**	**24560-245**	**24560-246**
84	235	160, 220 mm board depth	**24560-052**		
84	295	160, 220, 280 mm board depth	**24560-053**		
84	355	160, 220, 280 mm board depth	**24560-054**		
84	415	160, 220, 280 mm board depth	**24560-055**		
84	475	160, 220, 280 mm board depth	**24560-056**		
Assembly tool, for EMC gasket, stainless steel (horizontal rails), 1 piece 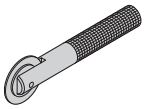			–	**24560-271**	

Subracks – europacPROServicePLUS

Cover/shielding to front and rear

- The front and rear sides of the subrack can be shielded by a hinged front panel or by a fixed front panel and 19" brackets
- The rear can be shielded with a front panel and a corner profile

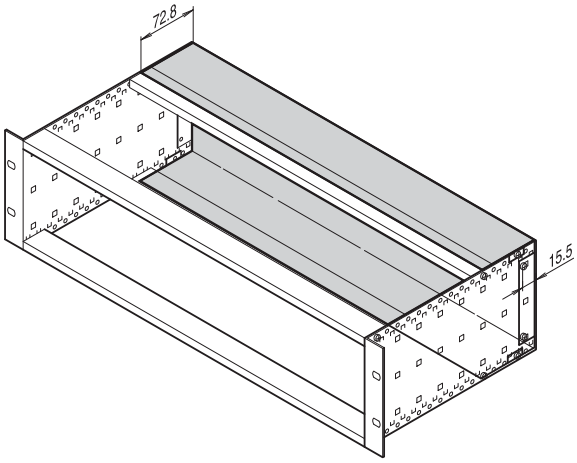

BZA45814

Rear hood

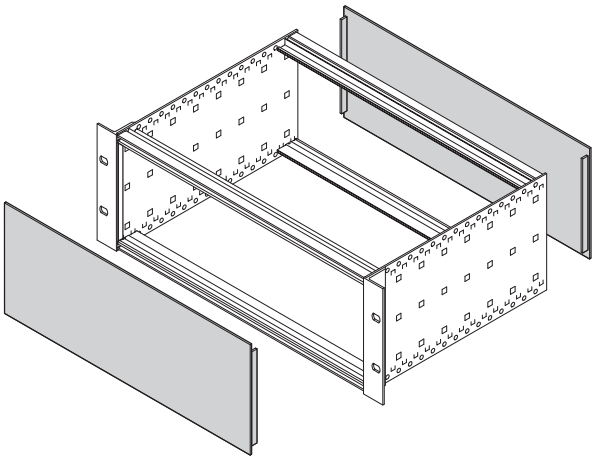

06112089

Front panel for front and rear

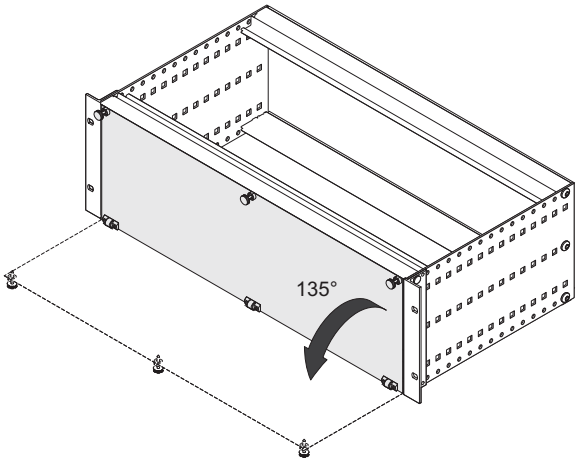

06112090

Front panel, hinged/pivoted

Subracks – europacPROServicePLUS

Rear hood for 3 U and 6 U subracks (for stainless steel EMC gasket)

Order Information

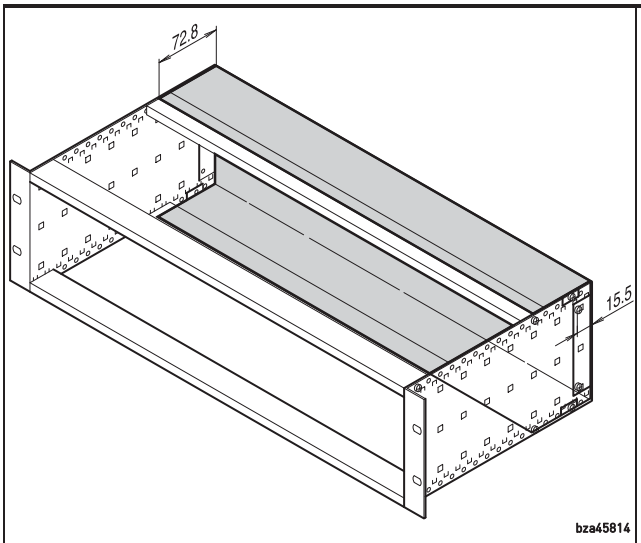

Rear hood

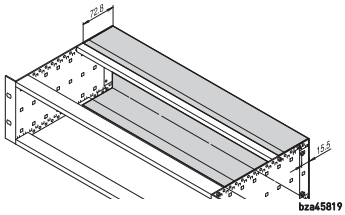

Al, 1 mm, clear passivated;
60 mm additional side panel depth required (board depth + 60 mm);
for shielding please order EMC gasket for horizontal rail separately;
cannot be used simultaneously with rear corner profile

Stainless steel EMC gasket, between cover plate and horizontal rail

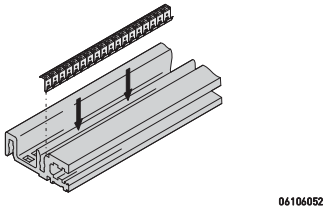

stainless steel EMC gasket,
clips into the horizontal rail and forms the contact with the cover plate;
suitable for all horizontal rails

Height U	Width HP	Rear hood 1 piece	Stainless steel EMC gasket PU 10 pieces	Stainless steel EMC gasket PU 100 pieces
3	42	**34561-750**	**24560-241**	–
3	84	**34561-752**	**24560-245**	**24560-246**
6	63	**34561-763**	**24560-243**	–
6	84	**34561-764**	**24560-245**	**24560-246**
Torx panhead screw, M4 × 6, St, zinc-plated, PU 100 pieces		**24560-135**	–	
Assembly tool, for EMC gasket, stainless steel (horizontal rails), 1 piece 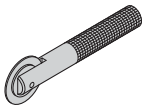		–	**24560-271**	

Note

- Other dimensions of rear hood available on request

Subracks – europac PRO ServicePLUS

Front/rear panels, unshielded

FRONT PANEL EXPRESS

Order Information

04292001

Height U	Height mm	Width HP	Front panel: pre-anodised, cut edges plain, Al, 2.5 mm – 1 piece	Front panel: pre-anodised, cut edges plain, Al, 2.5 mm – 1 piece (SPQ 5)[1]	Front panel: anodised, Al, 2.5 mm – 1 piece	Front panel: anodised, Al, 2.5 mm – 1 piece (SPQ 5)[1]	Front panel: Front anodised, rear iridescent green chromated, Al, 2.5 mm – 1 piece	Front panel: Front anodised, rear iridescent green chromated, Al, 2.5 mm – 1 piece (SPQ 5)[1]
1	44.45	28	–	–	–	–	20850-423	–
1	44.45	42	–	–	–	–	20850-424	–
1	44.45	63	–	–	–	–	20850-425	–
1	44.45	84	–	–	–	–	20850-426	–
2	84.0	84	30818-271	–	30807-416	–	30847-461	–
3	128.4	2	–	30810-433	–	30810-432	–	30847-470
3	128.4	3	–	30818-272	–	30807-508	–	30847-471
3	128.4	4	–	30818-273	–	30807-481	–	30838-043
3	128.4	5	–	30818-274	–	30807-510	–	30838-044
3	128.4	6	–	30818-275	–	30807-482	–	30838-045
3	128.4	7	–	30818-276	–	30807-509	–	30838-046
3	128.4	8	–	30818-277	–	30807-484	–	30838-047
3	128.4	10	–	30818-279	–	30807-483	–	30838-049
3	128.4	12	–	30818-281	–	30807-485	–	30838-051
3	128.4	14	–	30818-282	–	30807-501	–	30838-053
3	128.4	21	–	30818-289	–	30807-487	–	30838-060
3	128.4	28	–	30818-296	–	30807-496	–	30838-067
3	128.4	42	30818-310	–	30807-494	–	30838-081	–
3	128.4	63	30818-331	–	30808-067	–	30838-102	–
3	128.4	84	30818-352	–	30807-506	–	30838-123	–
4	172.9	42	–	–	–	–	30847-463	–
4	172.9	63	–	–	–	–	30847-464	–
4	172.9	84	30818-434	–	30807-596	–	30847-465	–
6	261.8	2	–	30818-747	–	30818-741	–	30847-472
6	261.8	4	–	30818-518	–	–	–	30838-124
6	261.8	5	–	–	–	–	–	30838-125
6	261.8	6	–	–	–	–	–	30838-126
6	261.8	7	–	–	–	–	–	30838-127
6	261.8	8	–	30818-522	–	–	–	30838-128
6	261.8	10	–	30818-524	–	30807-753	–	30838-130
6	261.8	12	–	30818-526	–	–	–	30838-132
6	261.8	14	–	30818-528	–	30807-758	–	30838-134
6	261.8	16	–	30818-530	–	–	–	30838-136
6	261.8	21	–	30818-535	–	30807-757	–	30838-141
6	261.8	28	–	30818-542	–	30807-766	–	30838-148
6	261.8	42	30818-556	–	30807-764	–	30838-162	–
6	261.8	63	30818-577	–	30807-771	–	30838-183	–
6	261.8	84	30818-598	–	30807-776	–	30838-204	–
9	395.1	4	–	–	–	–	–	30847-476
9	395.1	8	–	–	–	–	–	30847-480
9	395.1	10	–	–	–	–	–	30847-482
9	395.1	12	–	–	–	–	–	30847-484
9	395.1	84	–	–	–	–	30847-556	–

■Front panel assembly kits, sleeves, collar screws, quick-release fasteners see page 6.65

1) SPQ (standard pack quantity): Part number includes 1 piece, but delivery is exclusively made in standard pack quantity (SPQ); please order at least the SPQ quantity or a multiple

Subracks – europacPROServicePLUS

Front/rear panels shieldable with stainless steel EMC gasket

FRONT PANEL
EXPRESS

Order Information

04292001

Height U	Height mm	Width HP	Front panel: Front panel for shielding with EMC gasket (stainless steel) – Al, 2.5 mm, front anodized, rear iridescent green chromated, 2 alignment pins pressed-in, St, stainless: 1 piece	1 piece (SPQ 5)[1]	Stainless steel EMC gasket – inserted laterally into the grooves of the front panel, suited for temperatures above 70 °C: PU 10 pieces	PU 100 pieces
2	84	84	**30846-588**	–	**21101-775**	**21101-776**
3	128.4	2	–	**30846-864**	**21101-705**	**21101-706**
3	128.4	3	–	**20846-425**		
3	128.4	4	–	**20846-426**		
3	128.4	5	–	**20846-427**		
3	128.4	6	–	**20846-428**		
3	128.4	7	–	**20846-429**		
3	128.4	8	–	**20846-430**		
3	128.4	10	–	**20846-431**		
3	128.4	12	–	**20846-432**		
3	128.4	14	–	**20846-433**		
3	128.4	21	–	**20846-434**		
3	128.4	28	–	**20846-436**		
3	128.4	42	**20846-437**	–		
3	128.4	63	**20846-438**	–		
3	128.4	84	**30846-676**	–		
4	172.9	42	**30846-681**	–	**21101-713**	**21101-714**
4	172.9	63	**30846-682**	–		
4	172.9	84	**30846-683**	–		
6	261.8	2	–	**30846-865**	**21101-707**	**21101-708**
6	261.8	4	–	**20846-443**		
6	261.8	5	–	**20846-444**		
6	261.8	6	–	**20846-445**		
6	261.8	7	–	**20846-446**		
6	261.8	8	–	**20846-447**		
6	261.8	10	–	**20846-448**		
6	261.8	12	–	**20846-449**		
6	261.8	14	–	**20846-450**		
6	261.8	16	–	**20846-456**		
6	261.8	21	–	**20846-451**		
6	261.8	28	–	**20846-452**		
6	261.8	42	**20846-453**	–		
6	261.8	63	**20846-454**	–		
6	261.8	84	**30846-771**	–		
9	395.1	84	**30846-859**	–	**21101-709**	**21101-710**
Assembly tool, for stainless steel EMC gasket					**24560-270**	

■Front panel assembly kits, sleeves, collar screws, quick-release fasteners see page 6.65

1) SPQ (standard pack quantity): Part number includes 1 piece, but delivery is exclusively made in standard pack quantity (SPQ); please order at least the SPQ quantity or a multiple

Subracks – europacPROServicePLUS

Front/rear panels shieldable with textile EMC gasket

FRONT PANEL
EXPRESS

Order Information

04292001

Height U	Height mm	Width HP	Front panel: Front panel for shielding with EMC sealing (textile) – Al extrusion, 2.5 mm, front anodised,rear conductive; 3, 6 U with alignment pin (not 84 HP) – 1 piece	Front panel: Front panel for shielding with EMC sealing (textile) – 1 piece (SPQ 5)[1]	Front panel: Textile EMC gasket – textile gasket, core: foam, sleeve: textile cladding with CuNi coating, UL 94 V-0 – PU 10 pieces	Front panel: Textile EMC gasket – PU 100 pieces
2	84	84	20848-262	–	–	21101-856
3	128.4	2	–	30849-001	21101-853	21101-854
3	128.4	3	–	30849-004		
3	128.4	4	–	30848-354		
3	128.4	5	–	30848-378		
3	128.4	6	–	30848-380		
3	128.4	7	–	30848-382		
3	128.4	8	–	30848-356		
3	128.4	10	–	30848-386		
3	128.4	12	–	30848-358		
3	128.4	14	–	20848-013		
3	128.4	21	–	20848-020		
3	128.4	28	–	20848-027		
3	128.4	42	20848-047	–		
3	128.4	63	20848-068	–		
3	128.4	84	20848-097	–		
4	172.9	28	–	20848-268	21101-858	–
4	172.9	42	20848-269	–		
4	172.9	63	20848-270	–		
4	172.9	84	20848-271	–		
6	261.8	2	–	30849-002	21101-855	21101-856
6	261.8	4	–	30848-355		
6	261.8	5	–	30848-379		
6	261.8	6	–	30848-381		
6	261.8	7	–	30848-383		
6	261.8	8	–	30848-357		
6	261.8	10	–	30848-387		
6	261.8	12	–	30848-359		
6	261.8	14	–	20848-106		
6	261.8	16	–	20848-108		
6	261.8	21	–	20848-113		
6	261.8	28	–	20848-120		
6	261.8	42	20848-139	–		
6	261.8	63	20848-160	–		
6	261.8	84	20848-189	–		
9	395.1	84	20848-280	–	21101-859	21101-904

■Front panel assembly kits, sleeves, collar screws, quick-release fasteners see page 6.65

1) SPQ (standard pack quantity): Part number includes 1 piece, but delivery is exclusively made in standard pack quantity (SPQ); please order at least the SPQ quantity or a multiple

Subracks – europacPROServicePLUS

Front panels, hinged and pivoted

Order Information

		Front panel, bottom-hinged		Front panel, pivoted
		shielded	unshielded	
		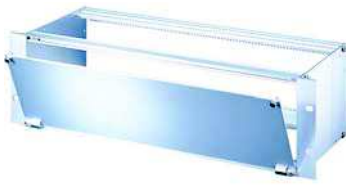 04295001		04295002
		Al, 2.5 mm, front anodised, rear iridescent green chromated; hinge, Zn die-cast, nickel-plated; 2 x sleeve, PA; 2 x knurled screws M2.5 x 12.3, St, nickel-plated; 1 x textile EMC gasket	Al, 2.5 mm, anodised, cut edges plain; hinge, Zn die-cast, nickel-plated; 2 x sleeve, PA; 2 knurled screws M2.5 x 12.3, St, nickel-plated	Al, 2.5 mm, front anodised, rear iridescent green chromated; hinge, die-cast zinc, chrome-plated; textile EMC gasket
Height	Width			
U	HP	1 piece	1 piece	1 piece
3	28	**20848-608**	**20838-280**	–
3	42	**20848-599**	**20838-271**	–
3	63	**20848-600**	**20838-272**	–
3	84	**20848-601**	**20838-273**	**20848-611**
4	42	**20848-605**	**20838-277**	–
4	63	**20848-606**	**20838-278**	–
4	84	**20848-607**	**20838-279**	–
6	28	**20848-696**	–	–
6	42	**20848-602**	**20838-274**	–
6	63	**20848-603**	**20838-275**	–
6	84	**20848-604**	**20838-276**	**20848-617**

Note

- Front panel can be removed in opened position (> 135°)

Subracks – europacPROServicePLUS

Shielding is required between the following components of a subrack

- Front panel/rear panel and horizontal rail, see page 6.55
- Front panel and 19" bracket/corner profile or in case of depth-offset installation, see page 6.55
- Cover plate/horizontal rail, see page 6.44
- Cover plate/side panel, see from page 6.44
- Horizontal rail/horizontal rail in combined mounting (3 U + 3 U and 6 U), see page 6.59
- Shielding for backplane and side panel see page 6.55

EMC shielding concepts

- Shielding concepts in accordance with IEEE and IEC
- Shielding effectiveness has been determined in various series of measurements in accordance with IEC 61587-3 and can be found online together with the relevant standard product
- The combined use of stainless steel and textile EMC gaskets is functionally possible without any problems

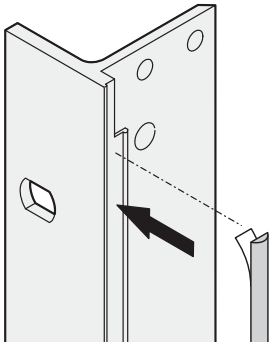

06108073

EMC shielding concept with EMC textile gaskets

- The seal is affixed to the left-hand side of the subrack (viewed from front) or to the front panel profile, respectively
- An EMC gasket with CuNi coating assures a long-term high level of shielding, typically 40 dB at 2 GHz
- Temperature-resistant adhesive layer is protected by a removable film
- Rear shielding is obtained using front panels or a rear hood
- Temperature range -40° C ... +70° C
- **Note:** rear hood and corner profile cannot be used simultaneously

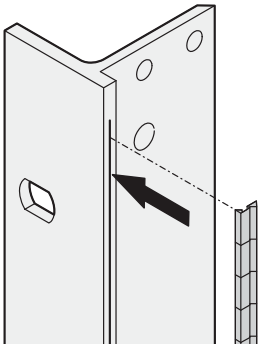

06108074

EMC shielding concept with stainless steel EMC gaskets)

- Symmetrical arrangement of EMC gaskets on the left and right hand sides of subrack and front panel
- Shielding: typically 40 dB at 2 GHz
- Can be used for temperatures above +70° C
- **Note:** rear hood and corner profile cannot be used simultaneously

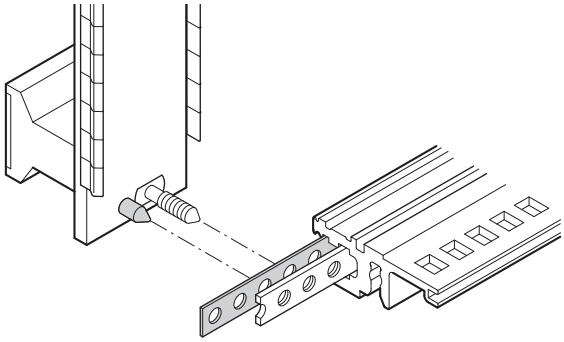

06112091

Front panel shielding concept

- Front panels are available for textile or stainless steel EMC gasket options
- Alignment pins are pressed-in in the front panel to position the gaskets securely and to compress them evenly
- An alignment pin positions the perforated strip in the horizontal rail
- Alignment pin and perforated strip provide an optimal positioning of the shielded assemblies; the front panels are not forced sideways by the shielding elements (Schroff patent)

Subracks – europacPROServicePLUS

EMC gaskets between front/rear panel and horizontal rail

Order Information

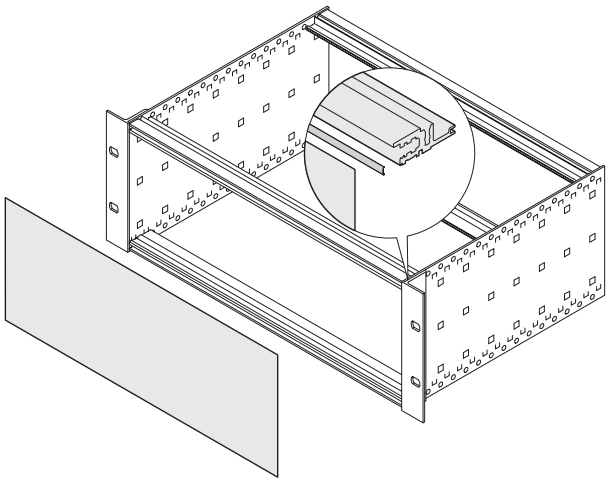

Stainless steel EMC gasket
between front panel/rear panel and horizontal rail

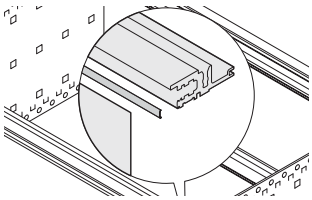

stainless steel; for front and rear horizontal rails (type VT)

Width HP	Depth mm	PU 10 pieces	PU 100 pieces
28	131.8	**24560-229**	–
42	202.9	**24560-231**	–
63	304.5	**24560-233**	–
84	416.6	**24560-235**	**24560-236**

EMC gaskets between front panel and 19" bracket/corner profile

Order Information

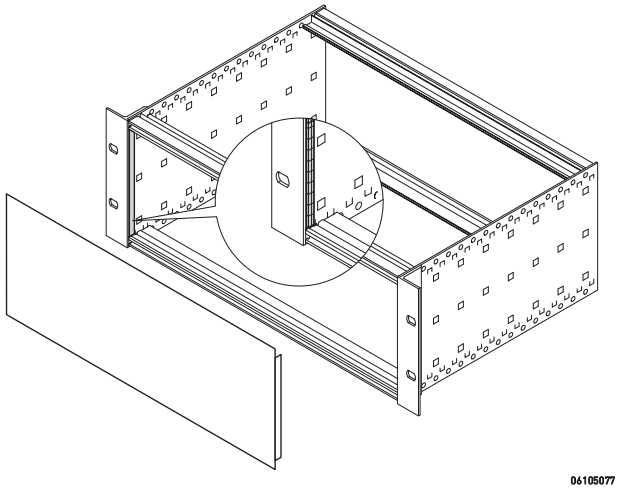

Stainless steel EMC gasket
between front panel/rear panel and 19" bracket/corner profile

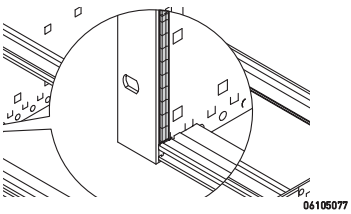

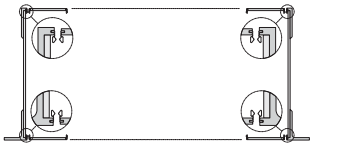

inserted laterally into the grooves
of the front panel

Textile EMC gasket
between front panel/rear panel and 19" bracket/corner profile

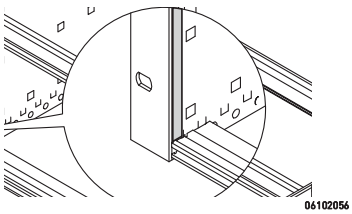

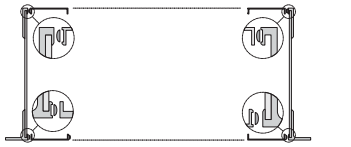

textile gasket, core: foam,
sleeve: textile cladding with CuNi coating,
UL 94 V-0

Height U	Depth mm	Stainless steel EMC gasket PU 10 pieces	Stainless steel EMC gasket PU 100 pieces	Textile EMC gasket PU 10 pieces	Textile EMC gasket PU 100 pieces
3	97.5	**21101-705**	**21101-706**	**21101-853**	**21101-854**
4	142.5	**21101-713**	**21101-714**	**21101-858**	–
6	232.5	**21101-707**	**21101-708**	**21101-855**	**21101-856**
9	365.0	**21101-709**	**21101-710**	**21101-859**	**21101-904**
Assembly tool, for stainless steel EMC gasket 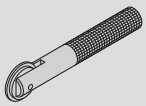		**24560-270**		–	

Subracks – europacPROServicePLUS

EMC gaskets between horizontal rail and horizontal rail

Order Information

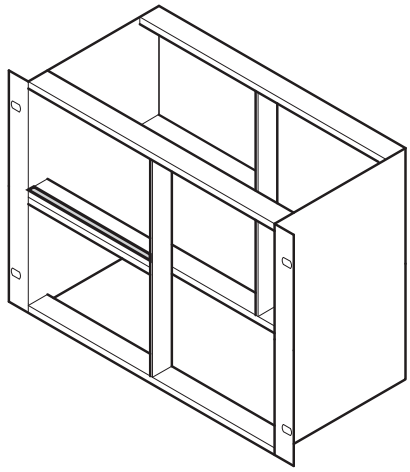

Stainless steel EMC gasket
between horizontal rail and horizontal rail

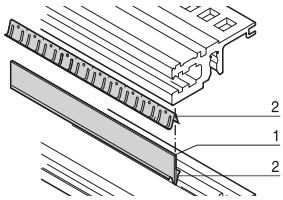

Item 1: cover strip, Al, 1 mm,
item 2: 2 x EMC seals (stainless steel);
for shielding of 2 horizontal rails positioned directly one above the other
if assembly area is divided vertically

Width HP	Depth mm	PU 1 kit
20	107.0	**24562-520**
28	147.0	**24562-528**
40	208.0	**24562-540**
42	218.0	**24562-542**
63	325.0	**24562-563**
84	431.0	**24562-584**

1) SPQ (standard pack quantity): Part number includes 1 piece, but delivery is exclusively made in standard pack quantity (SPQ);
please order at least the SPQ quantity or a multiple

EMC gaskets between front panel and side panel (depth-offset installation)

Order Information

Stainless steel EMC gasket
between front panel and side panel
(depth-offset installation)

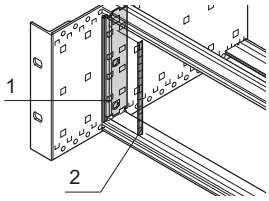

Item 1: 2 x support profiles, Al extrusion;
item 2: 2 x stainless steel EMC gasket;
fixing material kit for vertical EMC shielding between
depth-offset shielded front panels and side panel

Textile EMC gasket
between front panel and side panel
(depth-offset installation)

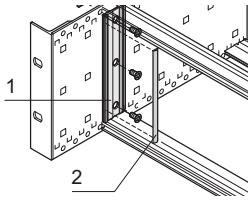

Item 1: 2 x support profiles, Al extrusion;
item 2: 1 x EMC textile gasket;
fixing material kit for vertical EMC shielding between
depth-offset shielded front panels and side panel

Height U	Depth mm	Stainless steel EMC gasket PU 1 kit	Textile EMC gasket PU 1 kit
3	97.5	**24562-199**	**24560-180**
4	142.5	24562-299	**24560-280**
6	187.5	**24562-499**	**24560-480**
Assembly tool, for stainless steel EMC gasket 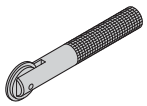		**24560-270**	–

Subracks – europacPROServicePLUS

EMC gaskets between backplane and side panel

Order Information

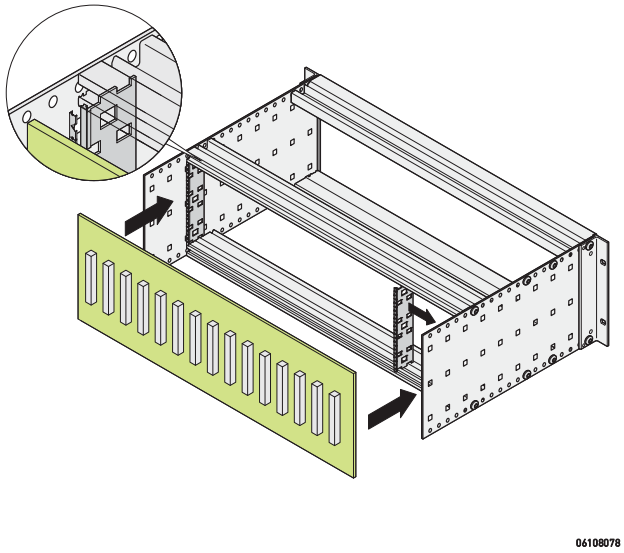	Stainless steel EMC gasket between backplane and side panel (depth-offset installation) 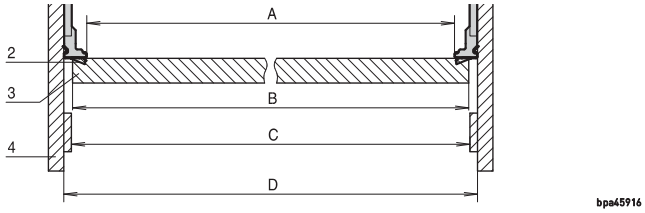 2 x support profile, Al extrusion, 2 x EMC gasket (stainless steel) Fixing materials kit and user manual; for vertical EMC shielding between shielded backplane and side panel; dimensions (84 HP): A = 425.8 mm, B < 429.9 mm, C = 429.8 mm, D = 431.8 mm
Height U	PU 1 kit
3	**24561-199**
6	**24561-499**

- With an appropriate design the backplane can be used as shielding rear panel; for that purpose a rear horizontal rail (type L-VT or H-VT) for depth-offset installation must be used to ensure the horizontal contact
- For vertical contact the support profile can be fixed to the europacPRO side panel (depth grid 30 mm)

Subracks – europacPROServicePLUS

Special interior mounting parts

- Combined mounting: 3 U + 3 U and 6 U, see page 6.59
- Horizontal board mounting, see page 6.60
- Mounting plates, see page 6.61
- Central locking for PCBs, see page 6.62
- Divider plates, see page 6.62
- Air baffles, see page 6.63
- Telescopic slides, see page 6.64
- Fixing parts (bolts, nuts, assembly tools), see page 6.63

Subracks – europacPROServicePLUS

Combined mounting (6 U and 2 x 3 U one above the other)

Order Information

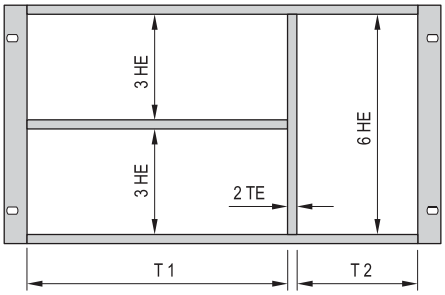 bza42182 Width pitch T1:T2	Combined mounting: horizontal and vertical subdivision (incl. front panel for stainless steel EMC gasket)	Alternative front panels for combined mounting		Splitting extrusion
		unshielded front panel, 6 U, 2 HP item 6	front panel for textile EMC gasket, 6 U, 2 HP item 6	for combined mounting item 2
	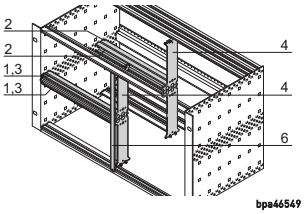	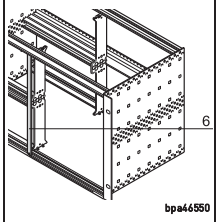	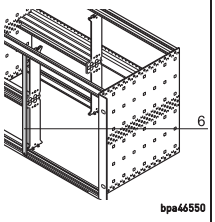	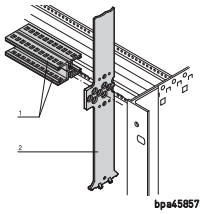
	Item 1: 2 front horizontal rails (H-KD), Al extrusion, anodised; item 2: 2 rear horizontal rails (AB), Al extrusion, anodised; item 3: threaded inserts, St, zinc-plated; item 4: Zn die-cast support members; item 6: front panel 2 HP, 6 U, with EMC stainless steel gasket; 84:0 without items 4, 5 Note see below 2)	Al, 2.5 mm, front anodised, rear iridescent green chromated	Al, 2.5 mm, U-profile with notch, 6 U, 2 HP	6 U, die-cast zinc; splitting extrusion is inserted in the grid holes of the horizontal rail; the splitting extrusion can be bolted
HP	PU 1 kit	1 (SPQ 5)	1 piece (SPQ 5)[1)]	1 piece
20:62	**24562-420**	**30847-472**	**30849-140**	**64560-010**
40:42	**24562-440**			
42:40	**24562-442**			
63:19	**24562-463**			
84:0	**24562-484**			
Torx countersunk screw M4 × 14, zinc-plated, PU 100 pieces to fixsplitting extrusion/horizontal rail	–	–	–	**24560-145**
Panhead screw M2.5 × 10, St, zinc-plated, PU 100 pieces to fix horizontal rail/splitting extrusion	–	–	–	**24560-179**
Pozidrive/slotted collar screw M2.5 x 12.3, St, nickel-plated, PU 100 pieces	–	**21101-101**	**21101-101**	–
Pozidrive/slotted collar screw M2.5, black, zinc-plated, PU 100 pieces	–	**21101-102**	**21101-102**	–
Washer 2.7 x 5 x 1, PA 6, PU 100 pieces	–	**21101-121**	**21101-121**	–
Textile gasket, core: foam, sleeve: textile cladding with CuNi coating, UL 94 V-0 PU 10 pieces	–	–	**21101-855**	–

2) The following guide rails cannot be used: type "accessory", type "accessory, strengthened" and type "for 4.4" PCB"

- Subdivision of the 6 U assembly area into:
  - 2 x 3 U
  - 1 x 6 U
- Designed to accomodate euroboards (100 mm high) and double euroboards (233.35 mm high)

Note

- Please order EMC gasketing kit for horizontal rails separately, see page 6.56
- Please order perforated strips for horizontal rails separately, see page 6.35
- Please order rear centre horizontal rail separately, see page 6.33

Subracks – europacPROServicePLUS

Horizontal board mounting in 3 or 4 U subrack

Order Information

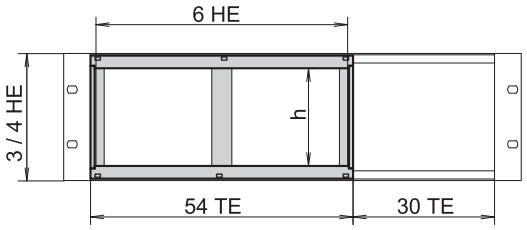

(1 TE = 1 HP, 1 HE = 1 U)

bpa45914

Height U	Usable height h HP	Mounting variants: Horizontal rail, front	Mounting variants: Horizontal rail, rear	Horizontal board mounting in 3 or 4 U subrack: Board cage	Front frame for EMC shielding	Front frame, unshielded
				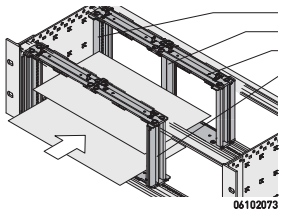 06102073	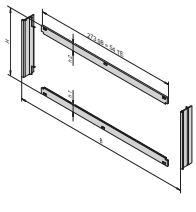 bpa45913	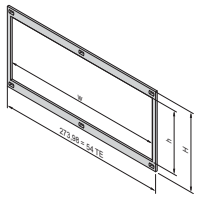 bza43061
				Struts, die-cast zinc; horizontal rails front and rear; threaded inserts, St, zinc-plated; fixing material kit; for horizontal mounting of double-height euroboards in 3 or 4 U high subracks/cases; 54 HP space required; **please order front frame for EMC shielding separately**	2 horizontal covers, Al 2.5 mm, front anodised, rear iridescent green chromated; 2 vertical trims, Al extrusion, passivated; stainless steel EMC gasket; front frame provides the contact between subrack and the sub-assemblies	Al, 2.5 mm, clear anodised; front frame with cut-out, clear internal width w = 266.35 mm
				PU 1 kit	PU 1 kit	1 piece
3	20			**24564-117**	**24564-109**	34564-108
3	20			**24564-118**	**24564-109**	34564-109
4	28			**24564-217**	**24564-209**	**34564-208**
Assembly tool, for stainless steel EMC gasket		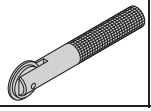		–	**24560-270**	–

* For direct backplane mounting

Note

- Please order front frame for EMC shielding separately

Subracks – europacPROServicePLUS

Mounting plates

Order Information

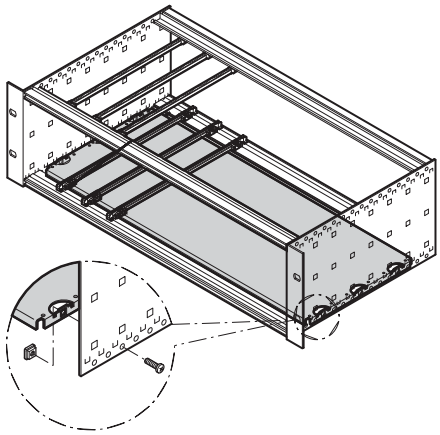 bpa45875			Mounting plate can be used in combination with cover plate 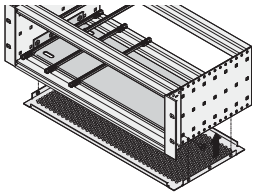 06108080 Al, 1.5 mm; mounting is only possible over the entire width between the side panels; width of mounting plate = W - 9.71 mm	Mounting plate for use without cover plate 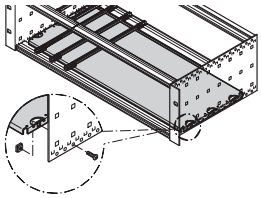 bpa45875 Al, 1.5 mm; for mounting over partial width, please order fixing strips separately	Mounting plate Fixing strip for partial widths 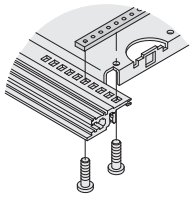 bpa46557 St, 2.5 mm, zinc-plated; is bolted from front to rear onto the horizontal rails; to fix mounting plates
Width W HP	W mm	Board length mm	1 piece	1 piece	1 piece
28	146.88	160	34563-001	**34562-745**	**30840-021**
28	146.88	220	**34563-009**	**34562-749**	**30840-033**
28	146.88	280	–	**34562-753**	**30840-045**
28	146.88	340	–	**34562-757**	**30840-057**
42	217.99	160	**34563-002**	**34562-746**	**30840-021**
42	217.99	220	**34563-014**	**34562-750**	**30840-033**
42	217.99	280	–	**34562-754**	**30840-045**
42	217.99	340	–	**34562-758**	**30840-057**
63	324.67	160	**34563-003**	**34562-747**	**30840-021**
63	324.67	220	**34563-019**	**34562-751**	**30840-033**
63	324.67	280	–	**34562-755**	**30840-045**
63	324.67	340	–	**34562-759**	**30840-057**
84	431.35	160	**34563-004**	**34562-748**	**30840-021**
84	431.35	220	**34563-024**	**34562-752**	**30840-033**
84	431.35	280	–	**34562-756**	**30840-045**
84	431.35	340	–	**34562-760**	**30840-057**
Assembly kit for mounting plate, PU 1 kit (Torx countersunk screw M4 x 5, St, zinc-plated, 12 pieces; screw M4 x 6, St, zinc-plated, 10 pieces; square nut M4, St, zinc-plated, 10 pieces)			**24560-184**	**24560-184**	–
Assembly kit for fixing strips for partial width mounting plates Torx screw M2.5 × 5, St, zinc-plated, PU 100 pieces			–	–	**24560-146**

Note

- For installation and fixing of heavy components
- In addition to the mounting plate, (EMC) cover plates can also be fitted to the subrack
- The mounting plate is as wide as the subrack or system case and is fixed to the side panels
- A guide rail can be fitted on the first and last slot
- Guide rails type "4.4" and type "strengthened" cannot be used

Subracks – europacPROServicePLUS

Central locking

Order Information

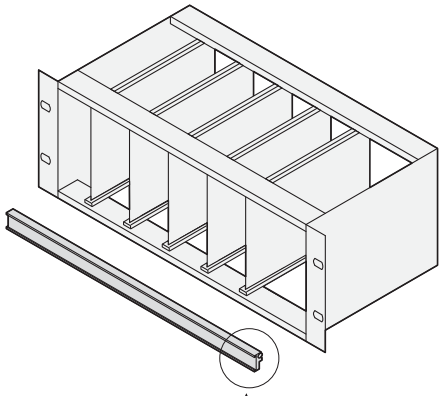

06197010

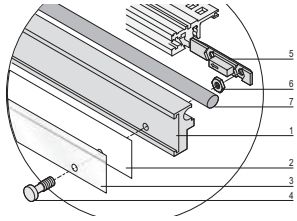

bza45819

Item 1: central rail, Al, anodised;
item 2: ID cardboard, white;
item 3: transparent cover strip, plastic;
item 4: 2 x knurled screw;
item 5: 2 x slide nut;
item 6: 2 x hexagon nut M2.5;
item 7: rubber gasket;
central locking allows joint locking of PCBs and serves as identification strip;
can be fitted to front and rear horizontal rails,
suitable for 84 HP width

Width HP	Length mm	Central locking for PCBs without front panels 1 piece
84	426.0	24560-167

Divider plate

Order Information

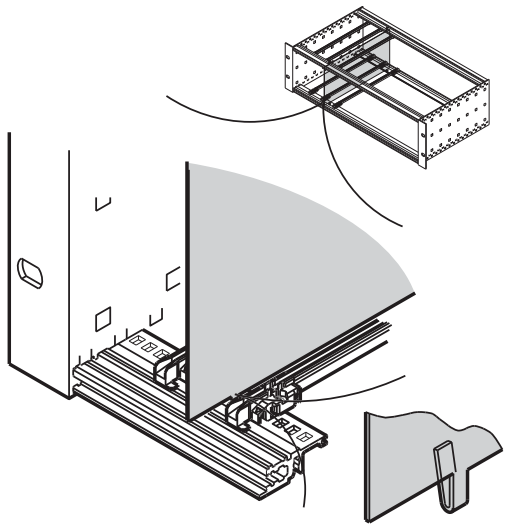

bpa45912

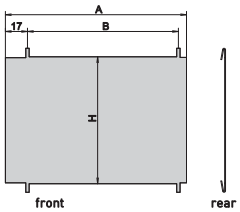

bpa45911

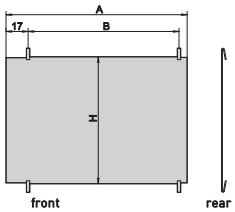

06105078

Stainless steel, 1 mm, is mounted by clipping onto horizontal rail,
space requirement on component side 2 mm;
mounting direction varies with shielding design (EMC stainless steel or textile gasket);
retrofitting the divider plate in an already-assembled subrack/case
will first require dismantling of the horizontal rails;
where front panels are unshielded, both mounting directions are possible

Height U	Depth mm	A mm	B mm	H mm	Divider plate – Mounting position when stainless steel EMC gasket is used / Mounting position when textile EMC gasket is used PU 10 pieces
3	160	158.3	135.0	113.5	34562-761
3	220	218.3	195.0	113.5	34562-762
6	160	158.3	135.0	246.9	34562-763
6	220	218.3	195.0	246.9	34562-764

Subracks – europacPROServicePLUS

Air baffles for slots

Order Information

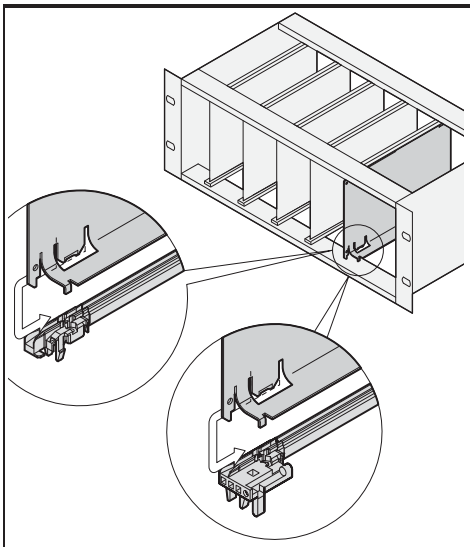

Depth mm	Width HP	Height U	Air baffle without front panel	Air baffle with front panel: Front panel with lateral groove for stainless steel EMC gasket	Air baffle with front panel: U front panel for textile EMC gasket
			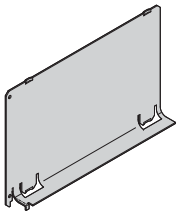 06108085	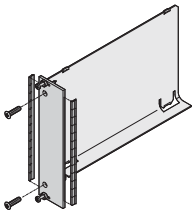 06108087	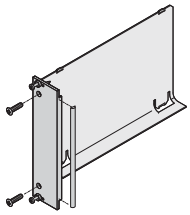 06108088
			Al, 1 mm, incl. fixing material kit; prevents an air short circuit in unused slot positions; is pushed into the groove of the guide rail	Air baffle, Al, 1 mm; front panel, Al, 2.5 mm, front anodised, rear conductive; stainless steel EMC gasket; fixing material kit prevents an air short circuit in unused slot positions; is pushed into the groove of the guide rail	Air baffle, Al, 1 mm, front panel, Al extrusion, 2.5 mm, front anodised, rear conductive; textile EMC gasket, fixing material kit prevents an air short circuit in unused slot positions; is pushed into the groove ofthe guide rail
			1 piece	1 piece	1 piece
160	4	3	**34562-823**	**20848-712**	**20848-728**
160	4	6	**34562-826**	**20848-720**	**20848-736**
160	8	3	**34562-833**	20848-714	20848-730
160	8	6	**34562-836**	20848-722	20848-738
160	12	3	**34562-843**	20848-716	20848-732
160	12	6	**34562-846**	20848-724	20848-740
220	4	3	**34562-824**	20848-713	20848-729
220	4	6	34562-827	20848-721	20848-737
220	8	3	34562-834	20848-715	20848-731
220	8	6	34562-837	20848-723	20848-739
220	12	3	34562-844	20848-717	20848-733
220	12	6	34562-847	20848-725	20848-741
Assembly tool for stainless steel EMC gasket, 1 piece 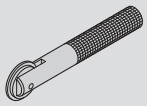			–	**24560-270**	–

Note

- Air baffle for 280 mm deep and for 80 mm rear I/O boards available on request

Subracks – europacPROServicePLUS

Simple telescopic slide for assembly of subracks in cabinets

06101006

- For mounting 84 HP wide subracks in the 19" plane
- Loading capacity: 25 kg per pair
- The guiding profile is matched to the fixing dimension in the cabinet (it is bolted to the 19" profile of the cabinet); the adaptor rail is matched to the depth and fixing dimension on the subrack (it is inserted into the guiding profile like a telescopic slide)
- Safety note:
  No protection against extraction, no stop at full extension

Order Information

Telescopic slides with guiding profile for fitting in cabinets

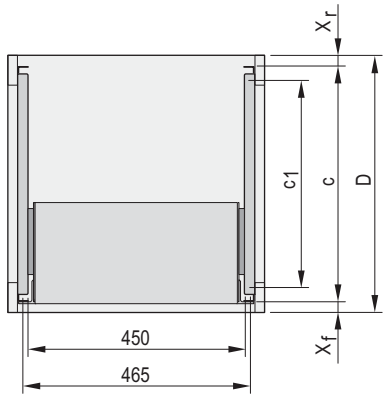

06108082

Description	Depth D mm	x_f mm	x_r mm	C mm	c1 mm	Part no.
VARISTAR	600	50	50	500	369	**24562-464**
VARISTAR	800	50	50	700	569	**24562-466**
VARISTAR	900	50	50	800	669	**24562-467**
VARISTAR	1000	50	50	900	769	**24562-468**
VARISTAR	1100	50	50	1000	869	**24562-472**
VARISTAR	1200	50	50	1100	969	**24562-473**
eurorack	600	60	60	480	397	**24562-449**
eurorack	800	60	60	680	597	**24562-451**
eurorack	900	60	60	780	697	**24562-452**
NOVASTAR	500	33	60	407	350	**24562-460**
NOVASTAR	600	33	60	507	450	**24562-461**
NOVASTAR	800	33	60	707	650	24562-474
Lab rack	250	0	0	250	162	**24562-446**

x_f, x_r: Distance of 19" plane to cabinet edge (front, rear)
c: Distance of 19" planes from each other,
c1: Fixing dimension of guiding profile on 19" panel/slide mounts

Order Information

Telescopic slides with adaptor rail for subracks

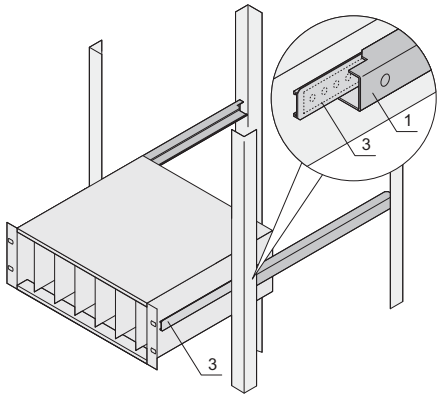

06108072

For subrack depth mm	Part no.
175	**24562-453**
235	**24562-454**
295	**24562-455**
355	**24562-456**
415	**24562-457**
475	**24562-458**

Subracks – europacPROServicePLUS

Assembly parts

- Quick-release fasteners
- Sleeves
- Screws
- Cage nuts
- Tools

Quick-release fasteners

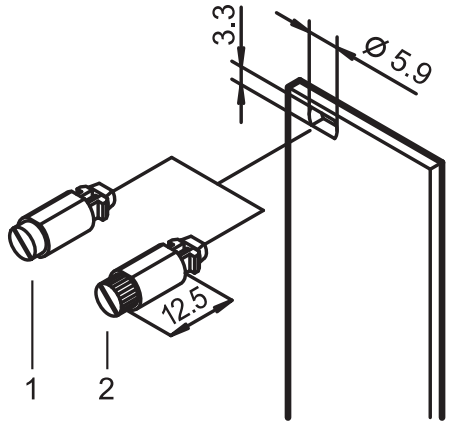

06702062

- Vibration and shock proof
- 1/4 rotary lock with defined stop
- Detection of locking position through slot position

Delivery comprises

Qty	Description
1	Locking pin, St, locking, Zn die-cast
1	Press-in sleeve, POM

Order Information

Item	Description	Qty/PU	Part no.
1	With slotted head, grey	100	**21101-847**
1	With slotted head, black	100	**21101-848**
2	With knurled and slotted head, grey	100	**21101-849**
2	With knurled and slotted head, black	100	**21101-850**

Note

Quick-release fasteners: mounting without threaded inserts

Sleeves

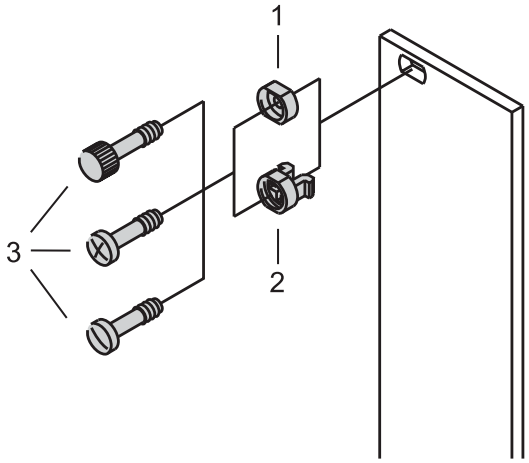

06702061

Order Information

Item	Description	Qty/PU	Part no.
2	Plastic sleeve, PA, grey	100	**21100-464**
2	Plastic sleeve, PA, black	100	**21100-591**
1	Metal sleeve, brass, nickel-plated	10	**21100-659**
1	Metal sleeve, brass, nickel-plated	100	**21100-660**
1	Metal sleeve, brass, black	100	**21100-886**
1	Metal sleeve, stainless steel	10	**21100-661**
1	Metal sleeve, stainless steel	100	**21100-662**

Note

- Metal sleeves must be pressed-in in front panels
- Sleeve does not fit in 2 HP wide front panels

Subracks – europacPROServicePLUS

Collar screws

Order Information

	Description	Application	Material	Dimension	Qty/PU	Part no.
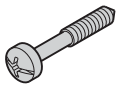 AZA46586	Collar screw with pozidrive/slot	For mounting of front panels when using threaded inserts	St, nickel-plated	M2.5 x 12.3	100	**21101-101**
			St, zinc-plated, black	M2.5 x 12.3	100	**21101-102**
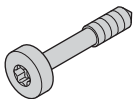 AZA45941	Torx collar screw	For mounting of front panels when using threaded inserts	St, nickel-plated	M2.5 x 12.3	100	**21101-782**
			St, zinc-plated, black	M2.5 x 12.3	100	**21101-783**
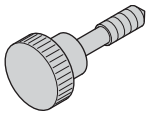 aza45929	Collar screw with knurled head	For mounting of front panels when using threaded inserts	Brass, nickel-plated	M2.5 x 12.3	100	**21101-749**
		For mounting of front panels when using threaded inserts for horizontal rails with long lip	Brass, nickel-plated	M2.5 x 12.3	100	**21101-909**

Torx screws, self-forming

Order Information

	Description	Application	Material	Dimension	Qty/PU	Part no.
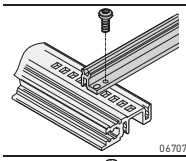 06707058	Torx panhead screw, self-forming	For extra-robust Al guide rails; torque max. 0.2 Nm	St, zinc flake coating, black	2.5 x 7.3	100	**24560-157**
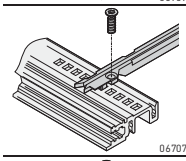 06707058	Torx countersunk screw, self-forming	For 4.4" board height, guide rail on horizontal rail, europacPRO, ratiopacPRO; torque max. 0.2 Nm	St, zinc-plated	2.5 x 7.7	100	**24560-158**
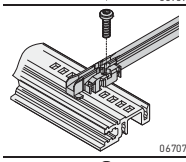 06707058	Torx panhead screw, self-forming	For plastic guide rail on horizontal rail; for panel bracket on horizontal rail; torque max. 0.2 Nm	St, zinc-plated	2.5 x 9.3	100	**24560-141**
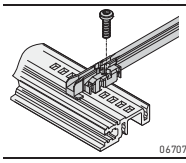 06707058	Torx panhead screw, self-locking	For plastic guide rails on horizontal rails	St, zinc-plated	2.5 × 9.3	100	**21500-039**
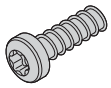 06707058	Torx panhead screw	For 6 U support member, backplane mounting, centre horizontal rail	St, zinc-plated	2.5 × 10	100	**24560-179**

Subracks – europacPROServicePLUS

Countersunk screws

Order Information

	Description	Application	Material	Dimension	Qty/PU	Part no.
AZA46585	Torx screw	For support profiles europacPRO, ratiopacPRO	St, zinc-plated	M4 x 5	100	**24560-139**
		For mixed board assembly and assembly of shortened horizontal rail on support member, with GND/earthing function	St, zinc-plated	M4 x 14	100	**24560-145**

Torx panhead screws

Order Information

	Description	Application	Material	Dimension	Qty/PU	Part no.
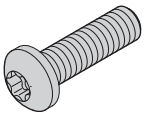 aza45940	Torx panhead screw	For Z-rails and connector assembly	St, nickel-plated	M2.5 x 7	100	**24560-147**
		For perforated rails	St, nickel-plated	M2.5 x 10	100	**24560-148**
		For backplane mounting	St, nickel-plated	M2.5 x 12	100	**24560-161**
			St, nickel-plated	M2.5 x 14	100	**24560-162**
aza45178	Washer	For insulated backplane mounting	Plastic, PA	2.8 x 6.3 x 2	100	**21101-964**
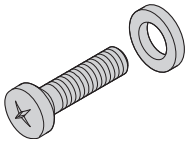 aza45940	Screw + plastic washer (PA)	For backplane mounting	St, nickel-plated	M2.5 x 12	100	**21100-777**
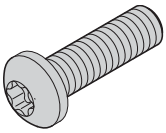 aza45940	Torx panhead screw	To bolt on support bracket, rear hood, corner profile on side panel, lengthening bracket and connecting bracket	St, zinc-plated	M4 x 6	100	**24560-135**
		To bolt-on cover plate or mounting plate, with GND/earthing function	St, zinc-plated	M4 x 6	100	**24560-151**
		To bolt-on cover plate or mounting plate, with GND/earthing function, self-forming thread	St, zinc-plated	M4 × 6	100	**21101-884**
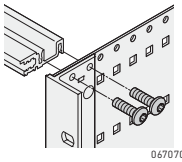 06707058		For horizontal rail on side panel if guide rails are bolted to slot 1	St, zinc-plated	M4 x 10	100	**24560-155**
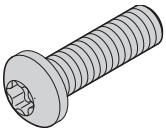 aza45940		For horizontal rail on side panel, with GND/earthing function	St, zinc-plated	M4 × 14	10	**24560-131**
		For horizontal rail on side panel, with GND/earthing function	St, zinc-plated	M4 x 14	100	**24560-130**

Subracks – europac PRO ServicePLUS

Grub screws

Order Information

	Description	Application	Material	Dimension	Qty/PU	Part no.
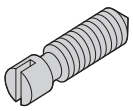 06702053	Grub screw	For threaded inserts M2.5 and perforated strips	Stainless steel	M2.5 x 9	100	**21101-359**
		For threaded inserts M2.5	St, nickel-plated	M2.5 x 8	100	**21100-276**
		For threaded inserts M3	St, zinc-plated	M3.0 x 8	100	**21100-646**

Square nuts

Order Information

	Description	Application	Material	Dimension	Qty/PU	Part no.
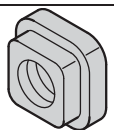 AZA45921	Square nut	For fixing: parts to side panels, support profiles, mounting plates	St, zinc-plated	M4	100	**24560-140**

Assembly kits

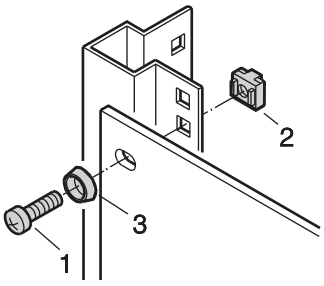

SC128XXX

- For assembly of subracks in cabinets or 19" cases
- For assembly of desk-top cases in cabinets by means of 19" brackets

Delivery comprises (kit)

Item	Qty	Description
1	1	Pozidrive screw M6 × 16, zinc-plated
2	1	Plastic washer, ABS, black
3	1	Cage nut M6, zinc-plated

Order Information

Description	Part no.
PU = 8 × screw, washer, nut	**21100-435**
PU = 50 each of M6 screw, washer and cage nut	**21101-809**
PU = 100 each of M6 screw, washer and cage nut	**21101-810**

- For 19" brackets with material thickness of 1.5 mm, see "Assembly kits" in chapter Cabinet accessories

Subracks – europacPROServicePLUS

Slide, to accomodate 2 nuts

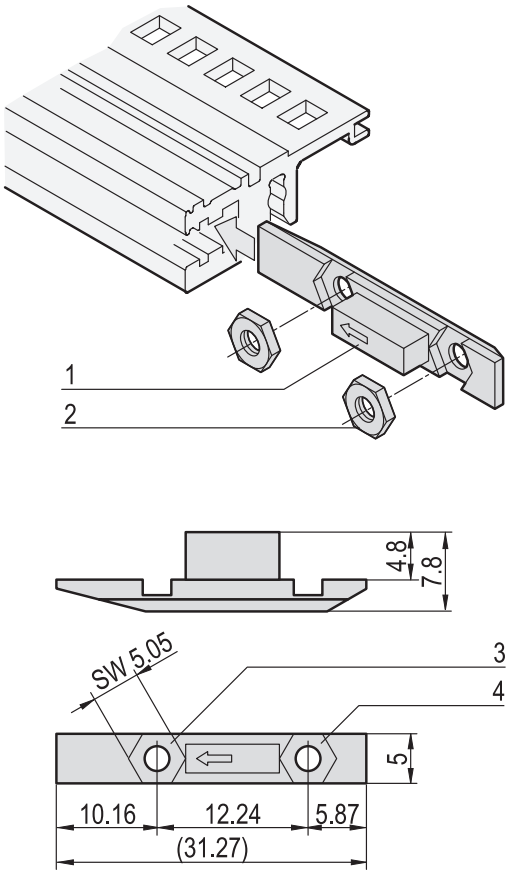

- The slide is pushed into the groove of the horizontal rail to front or rear (type VT)

Delivery comprises (kit)

Item	Qty	Description
1	1	Slide, PBT, red, UL 94 V-0
2	2	Nut, M2.5, St, zinc-plated

Order Information

Description		Part no.
Slide nut kit 1	100 slides/200 nuts	**24560-165**
Slide nut kit 2	12 slides/24 nuts	**24560-166**

Note

- Nuts used in item 3 suitable for:
  - hinged front panels, 84 HP
  - front or rear panels, 84 HP
- Nuts used in item 4 suitable for:
  - hinged front panels
- Nuts used in item 3 and 4 suitable for:
  - two front panels

Assembly tools

Order Information

	Description	Application	Dimension	Qty/PU	Part no.
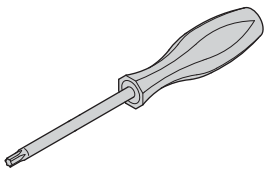 AZA45925	Torx screwdriver	T 8 torx	T8	1	64560-026
		T 20 torx	T20	1	64560-027
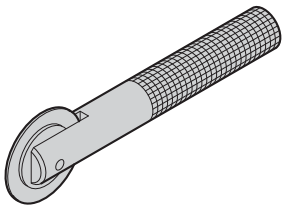 aza45938	Assembly tool	Exclusively to fix stainless steel EMC gaskets in horizontal rails	–	1	24560-271
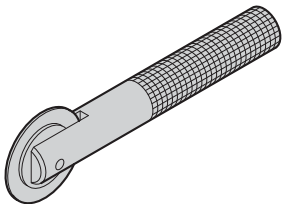 aza45937	Assembly tool	To fix stainless steel EMC gaskets on front panels with lateral slots	–	1	24560-270

Note

- Assembly tool to insert keying/coding pegs in guide rails is available on request

Tape measure

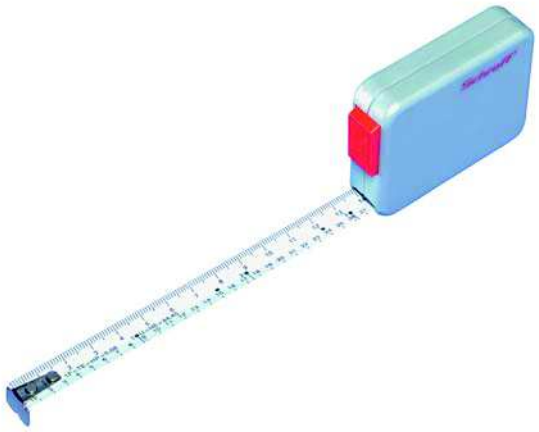

32506001

- Measuring tape with cm, U-, HP-division (length 2 m)
- Plastic housing, metal measuring tape with automatic collection

Order Information

Description	Qty/PU piece	Part no.
Tape measure	1	89009-001

Subracks – europacPROServicePLUS

Application examples

Application: Transportation/defense sectors

06108006

- Mounting frame to accomodate a 36 HP wide railway subrack, frame from stainless steel

06103001

- Robust assembly by double bolt-on fixing
- Lateral ducting in cabinet
- Combined mounting 6 U+ 2 x 3 U

Application: Measurement, control and instrumentation sectors

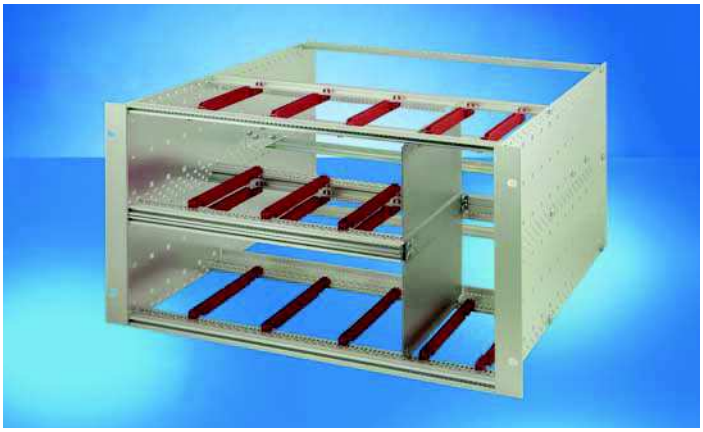

06108002

- Combined mounting with 2 x 3 U in 6 U
- Divider plate to separate different sections
- Installation with strengthened guide rails

06108003

- Subrack with additional telescopic fan unit
- Adaptation at bottom and top integrated into the side panel

Application: Telecoms sectors

06112023

- Shielded subrack for special applications with mounting plate, cover and base plate
- Mounting plate for heavy assemblies

06101005

- Subrack with plastic cable ducting for fibre optic cables
- Terminal area at top

Content

Cabinets 1

Wall mounted cases 2

Accessories for cabinets and wall mounted cases . 3

Climate control . 4

Electronics cases 5

Subracks/ 19" chassis 6

Front panels, plug-in units . . . 7

Systems 8

Power supply units 9

Backplanes . . . 10

Connectors, front panel component system 11

Appendix 12

Subracks – *europac PRO* for railway applications

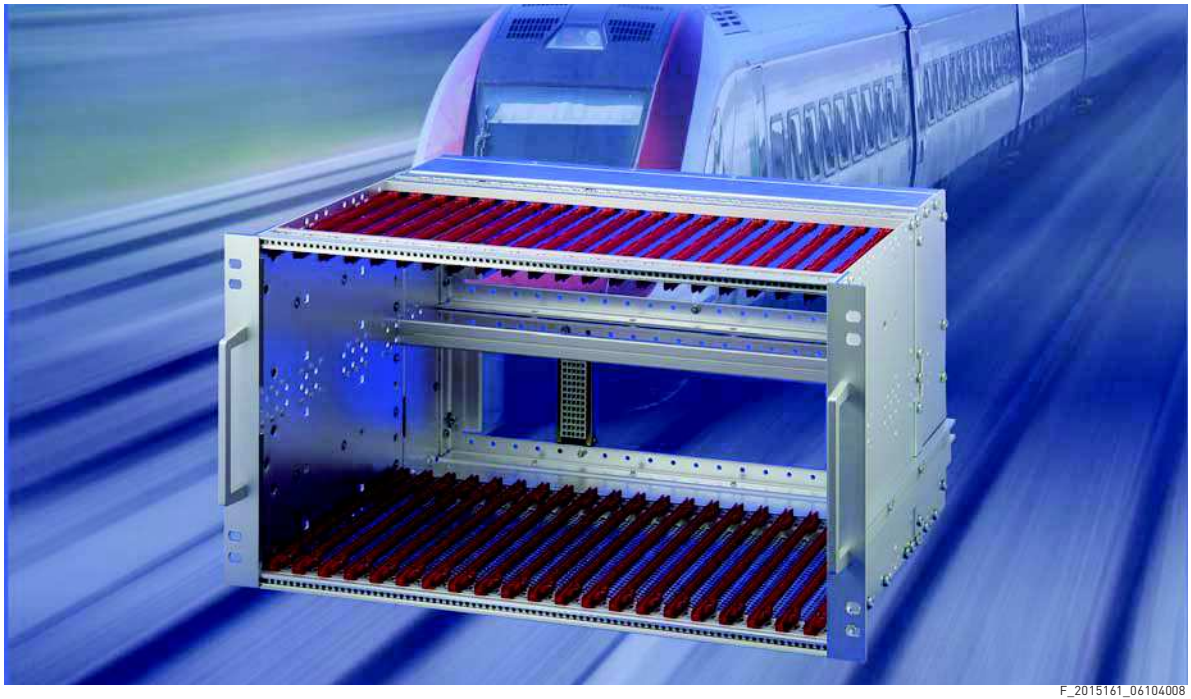

F_2015161_06104008

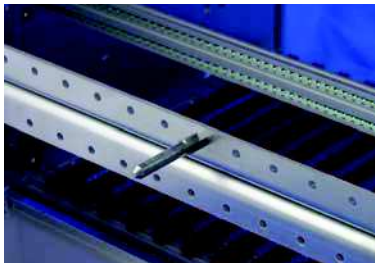

06108013

An alignment pin to NFF standard allows the easy installation of the subracks

06108014

Lateral support bars to NFF standard facilitate insertion of subrack into the (cabinet) frame

06108015

The 19" bracket is firmly fixed to the side panel (tox-cold welded) and is especially suited for high mechanical stresses(vibration resistance)

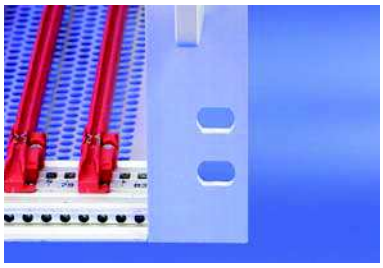

06108016

The double 19" screwing position adds to additionally safety (NFF standard)

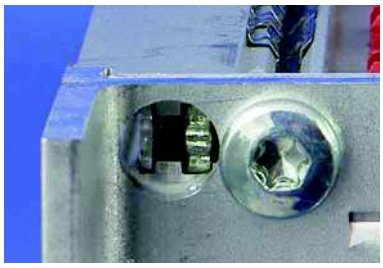

06108017

The cut-out in the side panel allows to retrofit the threaded insert, also if the side panels are already assembled

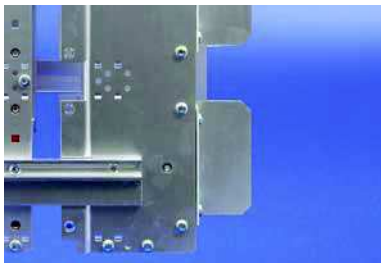

06108015

The rear brackets have two functions:
- push-in aid and
- transport protection for the connectors

The removable rear hood allows a fast cabling between backplane and connector

Subracks – europacPRO for railway applications

Overview 6.70

19" subrack for mobile rail applications

- Shock and vibration resistance to IEC 61587-1, EN 50155, NF F 61-005 / NF F 60-002, BN 411002 and BN 411003
- Versions for CompactPCI applications
- Best suited for high mechanical demands

06102008

BN 411002, 411003 subracks

- Height 3 U and 6 U
- Width 84 HP
- Unshielded and shielded versions

BN 411002/-003 subracks
unshielded 6.73
shielded 6.74

06104006

EN 50155 subrack

- Height 3 U and 6 U
- Width 84 HP
- Unshielded and shielded versions
- Shielded versions for CompactPCI applications

EN 50155 subracks
unshielded 6.75
shielded 6.76
shielded, for CompactPCI 6.77

06104003

SNCF subrack

- Height 3 U and 6 U
- Width 9 T (36 HP) and 21 T (84 HP)
- Unshielded and shielded versions
- Shielded versions for CompactPCI applications

SNCF subracks
unshielded 6.78
shielded 6.79
shielded, for CompactPCI 6.80

Accessories
Guide rails 6.81
Cover plates 6.82
General accessories in europacPRO section 6.17

ServicePLUS ... 6.84
Application examples 6.85

europacPRO ... 6.6
europacPRO for industrial applications 6.86
europacPRO for rugged applications 6.92

30407004

ServicePLUS from page 6.84

e.g. modification (cut-outs)
e.g. downloads (CAD drawings, user manuals, test reports)
e.g. custom solutions (special depths, electromagnetically shielded applications)

www.schroff.biz/ServicePLUS

Subracks – *europac PRO* for railway applications

Subrack for mobile rail applications

Solid mechanical construction

Electronics for mobile applications require robust mechanical construction that can withstand extreme environmental conditions. Our enclosure solutions protect the housed electronics thanks to their high mechanical strength and thus are an important element for secure and trouble-free operation of the entire system. Only dependability, down to the last detail, can make complex safety tasks achievable - and also economic.

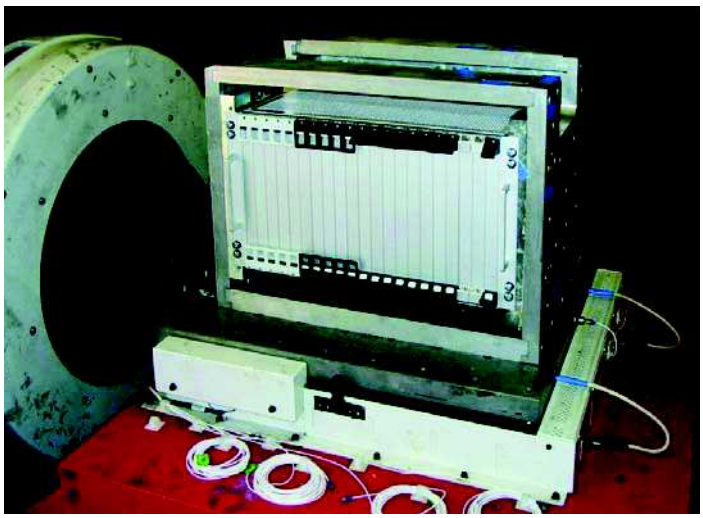

Shock and vibration resistance

Schroff products assure shock and vibration resistance in mobile applications e.g. by suitable material thicknesses and fixing elements. Tested with typical loads, they offer the best conditions for secure and reliable functioning in individual applications and projects.

Certification of mechanics

High-quality, robust and durable products are an important component for the certification of a complete application in accordance with the European Railway Standard DIN EN 50155, the German Railway Standards BN 411002 and BN 411003 and the French Railway Standards NF F 61-005 and NF F 60-002.

Note

fer = ferroviaire (French) = railway
1 T = 4 HP = 20.32 mm

Railway Technology brochure

A large amount of general information on our railway systems solutions can be found at www.schroff.co.uk/railway/ and in our "Railway Systems" brochure.

TÜV test report

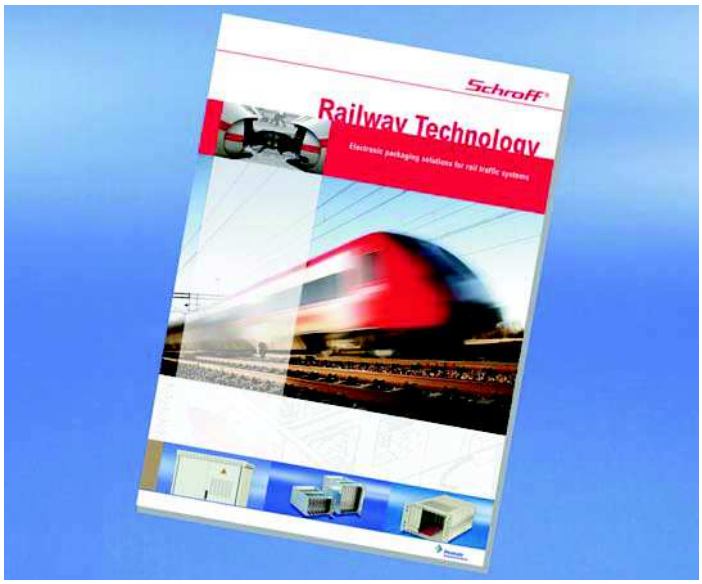

Subracks – europacPRO for railway applications

Kit, unshielded, 'heavy', for backplane mounting

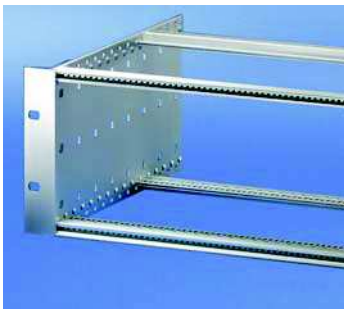

06102007

Without front handle

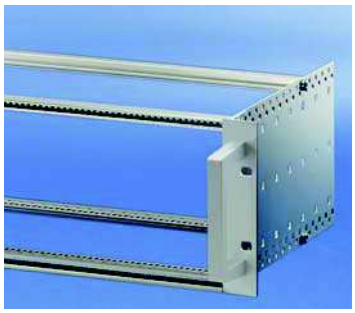

06111003

With front handle

- Subrack with side panel type H ("heavy"), 19" bracket is firmly connected to side panel (tox-cold welded)
- Rear horizontal rail for backplane mounting with insulation strip
- Tested to German Railway Standards BN 411002, BN 411003
- Versions with/without front handles

NEW

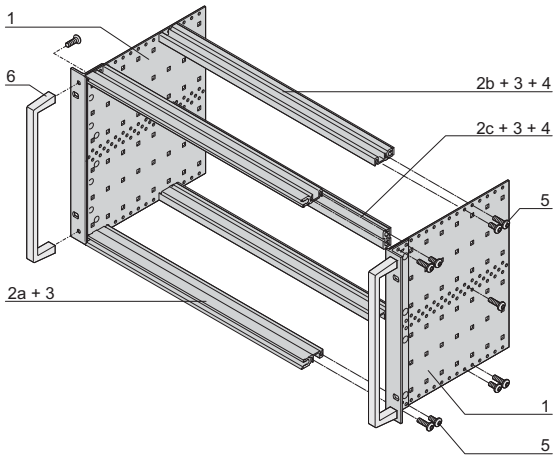

06111057

6 U

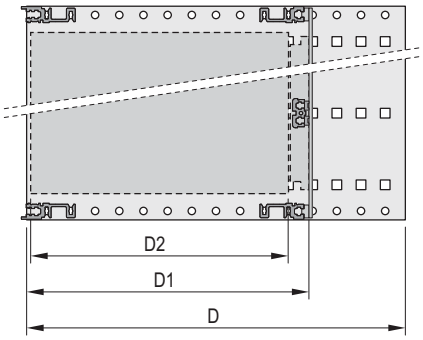

06108052

D=overall depth, D1=insertion depth,
D2=board depth = D1 - 15 mm

04400001

Rear horizontal rail for backplane mounting with insulation strip

Delivery comprises (Kit)

Item	Qty 3 U	Qty 6 U	Description
1	2	2	Side panel type H, Al, 2 mm, passivated, with 19" support bracket (tox-cold welded) for textile EMC gasket
2a	2	2	Front horizontal rail (H-KD)
2b	2	2	Rear horizontal rail (H-ST)
2c	-	1	Rear horizontal rail centre (H-ST)
3	4	6	Threaded inserts, front and rear (pre-fitted)
4	2	4	Insulation strip (pre-fitted)
5	1	1	Fixing material kit, user manual
6	2	2	Front handle (on version with front handle only)

Order Information

Height U	Width HP	Depth D mm	Depth D1 mm	Part no. with front handle	Part no. without front handle
3	84	175	175	**24567-161**	**24563-161**
3	84	235	175/235	**24567-162**	**24563-162**
3	84	295	175/235/295	**24567-163**	**24563-163**
3	84	355	175/235/295/355	**24567-164**	**24563-164**
6	84	175	175	**24567-461**	**24563-461**
6	84	235	175/235	**24567-462**	**24563-462**
6	84	295	175/235/295	**24567-463**	**24563-463**
6	84	355	175/235/295/355	**24567-464**	**24563-464**

Accessories

19" assembly kit (screw, washer, nut) (8 × screws, 8 × plastic washers, 8 × cage nuts)	**21100-435**

Guide rails (standard), ESD clips

Depth D2 mm	Qty/PU pieces	Part no.
160	10	**24560-351**
220	10	**24560-353**
280	10	**24560-379**
340	10	**24560-380**
ESD clip for guide rails PU 50 pieces		**24560-255**
Torx panhead screw , for extra bolting of the guide rails, 2.5 × 9.3, zinc-plated, PU 100 pieces		**24560-141**

Note

- Perforated rails, cover plates and assembly kit from page 6.34
- Textile EMC gaskets see page 6.21
- Further accessories from page 6.17
- ServicePLUS configuration from page 6.84

ServicePLUS see page 6.84

Subracks – europacPRO for railway applications

Kit, shielded, "heavy", for backplane mounting

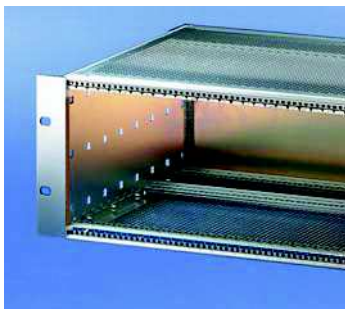

06102008

Without front handle

06111001

With front handle

- Subrack with side panel type H ("heavy"), 19" bracket is firmly connected to side panel (tox-cold welded)
- Horizontal rail rear for backplane mounting with insulating strip
- Shielding typically 40 dB at 1 GHz, 30 dB at 2 GHz (in accordance with VG 95373, part 15 or IEC 61587, part 3), under the condition that the front is closed with shielded front panels
- Tested to German Railway Standards BN 411002, BN 411003
- Versions with/without front handles

NEW

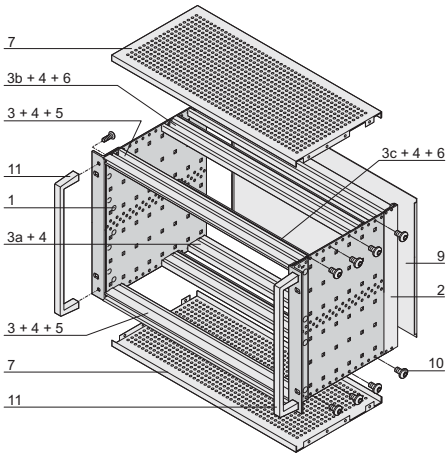

6 U

06111058

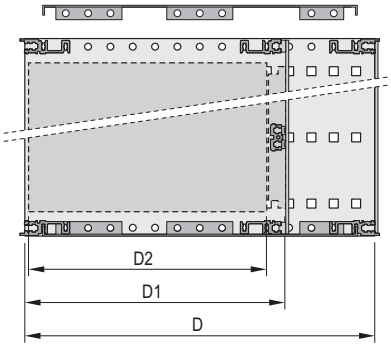

06108060

D = overall depth, D1 = insertion depth,
D2 = board depth = D1 - 15 mm

04400001

Rear horizontal rail for backplane mounting with insulation strip

Delivery comprises (Kit)

Item	Qty 3 U	Qty 6 U	Description
1	2	2	Side panel type H, Al, 2 mm, passivated, with 19" support bracket (tox-cold welded); for textile EMC gasket
2	2	2	Rear corner profile for textile EMC gasket
3	2	2	Front horizontal rail (H-KD)
3 a	2	2	Rear horizontal rail (H-KD)
3 b	2	2	Rear horizontal rail (H-ST)
3 c	-	1	Rear horizontal rail centre (H-ST)
4	6	8	Threaded insert (pre-fitted)
5	2	2	Perforated strip (pre-mounted)
6	2	4	Insulation strip (pre-fitted)
7	2	2	EMC cover plate
8	1	1	EMC gasketing material (pre-fitted)
9	1	1	EMC rear panel
10	1	1	Fixing material kit, user manual
11	2	2	Front handle (on version with front handle only)

Order Information

Height U	Width HP	Depth D mm	Depth D1 mm	Part no. with front handle	Part no. without front handle
3	84	235	175/235	**24567-172**	**24563-172**
3	84	295	175/235/295	**24567-173**	**24563-173**
3	84	355	175/235/295	**24567-174**	**24563-174**
6	84	235	175/235	**24567-472**	**24563-472**
6	84	295	175/235/295	**24567-473**	**24563-473**
6	84	355	175/235/295	**24567-474**	**24563-474**

Accessories

19" assembly kit (screw, washer, nut) (8 × screws, 8 × plastic washers, 8 × cage nuts)	**21100-435**

Guide rails (standard), ESD clips

Depth D2 mm	Qty/PU pieces	Part no.
160	10	**24560-351**
220	10	**24560-353**
280	10	**24560-379**

ESD clip for guide rails PU 50 pieces	**24560-255**
Torx panhead screw , for extra bolting of the guide rails, 2.5 × 9.3, zinc-plated, PU 100 pieces	**24560-141**

- Perforated rail for connectors see page 6.34
- Further accessories from page 6.17
- ServicePLUS configuration from page 6.84

ServicePLUS see page 6.84

Subracks – europacPRO for railway applications

Kit, EN 50155, unshielded

06104005

3 U

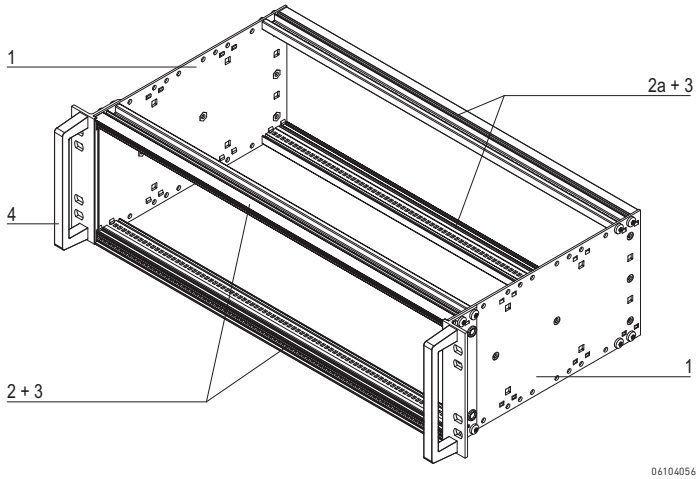

06104056

6 U

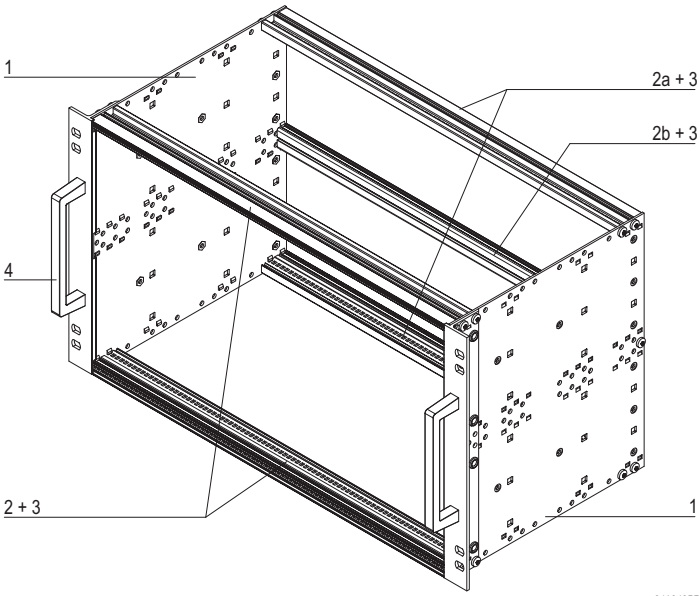

06104057

ServicePLUS see page 6.84

- Subrack in robust "heavy" version, 19" bracket is firmly connected to side panel (tox-cold welded)
- For mobile railway applications
- Tested to EN 50155
- 3 U and 6 U, 84 HP, 235 mm deep, for 220 mm board depth

Delivery comprises (kit)

Item	Qty 3 U	Qty 6 U	Description
1	2	2	Side panel type H with 19" support bracket (tox-cold welded); prepared for EMC textile gasket
2	2	2	Front horizontal rail (H-KD)
2 a	2	2	Rear horizontal rail (H-VT)
2 b	-	1	Rear centre horizontal rail (VT)
3	4	6	Threaded inserts
4	2	2	Handles
5	1	1	Assembly kit with self-locking screws
6	1	1	User manual

Order Information

Height U	Width HP	Depth mm	Part no.
3	84	235	**21500-077**
6	84	235	21500-078

Accessories

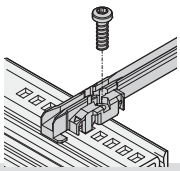

Guide rail, standard, 220 mm deep PBT, UL 94 V-0, red, groove width 2 mm, PU 10 pieces, see page 6.36	**24560-353**
Panhead screw with Torx M2.5 x 9.3, St, zinc-plated, self-locking, PU 100 pieces	**21500-039**
ESD clip for guide rails PU 50 pieces	**24560-255**
Cover plate for screw-fixing onto side panel width 84 HP, depth 220 mm, PU 1 kit	**21500-037**
19" dual fixing materials kit suitable for a subrack with double fixing holes (bolts, washers and nuts), PU 1 kit	**24566-109**

Note

- Test reports online
- ServicePLUS configuration see from page 6.84
- Further accessories see from page 6.17

Subracks – *europac PRO* for railway applications

Kit, EN 50155, shielded

06104006

3 U

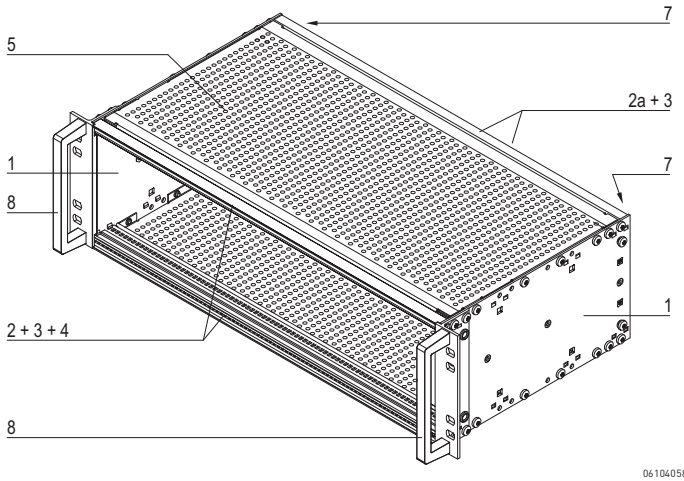

06104058

6 U

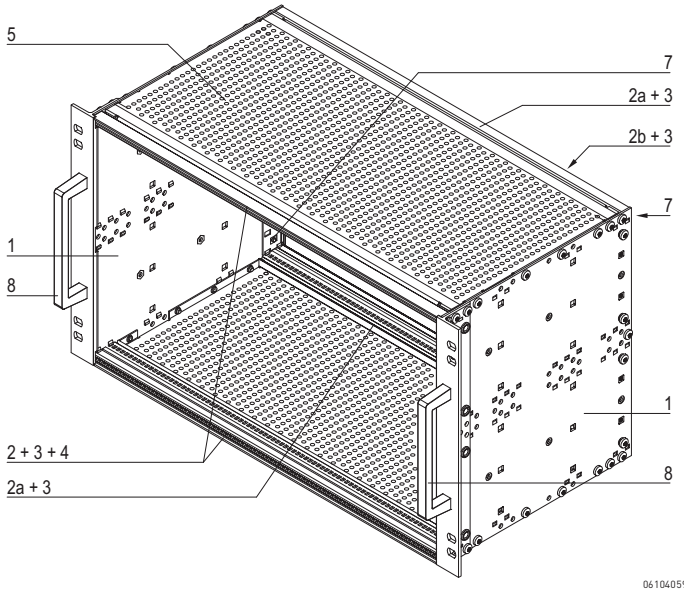

06104059

ServicePLUS see page 6.84

- Subrack in robust "heavy" version, 19" bracket is firmly connected to side panel (tox-cold welded)
- For mobile railway applications
- Tested to EN 50155
- 3 U and 6 U, 84 HP, 235 mm deep, for 220 mm board depth

Delivery comprises (kit)

Item	Qty 3 U	Qty 6 U	Description
1	2	2	Side panel type H with 19" support bracket (tox-cold welded); for textile EMC gasket
2	2	2	Front horizontal rail (H-KD)
2 a	2	2	Rear horizontal rail (H-VT)
2 b	-	1	Rear centre horizontal rail (VT)
3	4	6	Threaded inserts
4	2	2	Perforated strip
5	2	2	EMC cover plate 235 T
6	1	1	EMC gasketing kit
7	1	2	Backplane kit – EMC shielding material
8	2	2	Handles
9	1	1	Assembly kit with self-locking screws
10	1	1	User manual

Order Information

Height U	Width HP	Depth mm	Part no.
3	84	235	21500-079
6	84	235	**21500-080**

Accessories

Guide rail, standard, 220 mm deep PBT, UL 94 V-0, red, groove width 2 mm, PU 10 pieces, see page 6.36	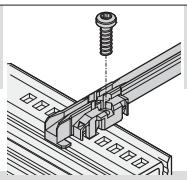	**24560-353**
Panhead screw with Torx M2.5 x 9.3, St, zinc-plated, self-locking, PU 100 pieces		**21500-039**
ESD clip for guide rails PU 50 pieces		**24560-255**
19" dual fixing materials kit suitable for a subrack with double fixing holes (bolts, washers and nuts), PU 1 kit		**24566-109**

Note

- Test reports online
- ServicePLUS configuration see from page 6.84
- Further accessories see from page 6.17

Subracks – europacPRO for railway applications

Kit, EN 50155, shielded, for CompactPCI applications

- Subrack in robust "heavy" version, 19" bracket is firmly connected to side panel (tox-cold welded)
- For mobile railway applications
- Tested to EN 50155
- 3 U and 6 U, 84 HP, 235 mm deep, for 160 mm board depth
- Subrack in accordance with IEEE 1101.10

3 U

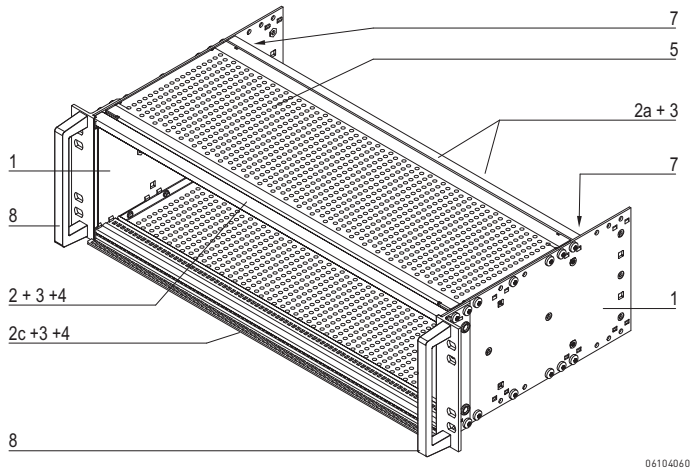

6 U

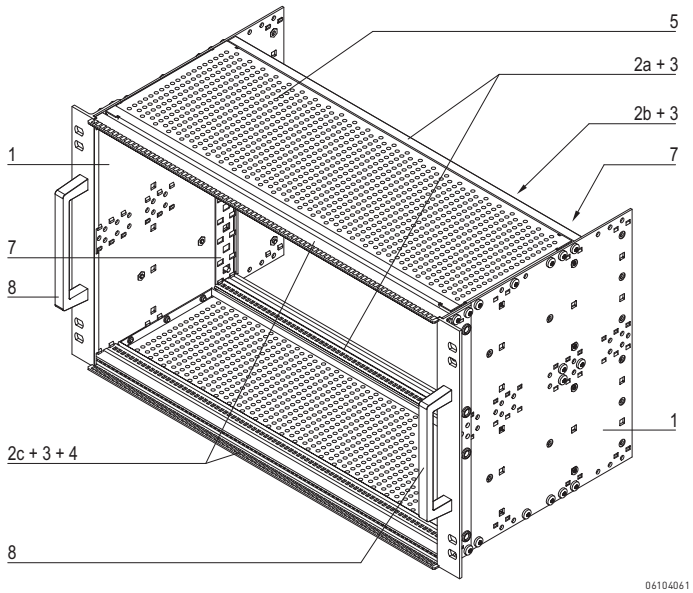

Delivery comprises (kit)

Item	Qty 3 U	Qty 6 U	Description
1	2	2	Side panel type H with 19" support bracket (tox-cold welded); for textile EMC gasket
2	1	-	Front horizontal rail (H-KD)
2 a	2	2	Rear horizontal rail (H-VT)
2 b	-	1	Rear centre horizontal rail (VT)
2 c	1	2	Front horizontal rail (H-LD)
3	4	6	Threaded inserts
4	2	2	Perforated strip
5	2	2	EMC cover plate, 175 T
6	1	1	EMC gasketing kit
7	1	2	Backplane kit – EMC shielding material
8	2	2	Handles
9	1	1	Assembly kit with self-locking screws
10	1	1	User manual

Order Information

Height U	Width HP	Depth mm	Part no.
3	84	235	21500-081
6	84	235	21500-082

Accessories

19" dual fixing materials kit suitable for a subrack with double fixing holes (bolts, washers and nuts), PU 1 kit	**24566-109**

Note

- Please order guide rails and ESD clips separately, see page 6.81
- Test reports online
- ServicePLUS configuration see from page 6.84
- Further accessories see from page 6.17

ServicePLUS see page 6.84

Subracks – europacPRO for railway applications

Kit, SNCF, unshielded

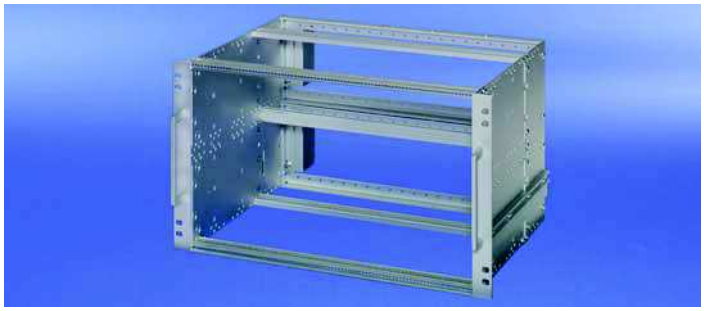

06104002

- Subrack, robust "heavy" version, 19" bracket is firmly connected to side panel (tox-cold welded)
- For mobile railway applications
- SNCF listed, europacPRO-fer, tested to NF F 61-005 and NF F 60-002
- 3 U and 6 U, 9 HP and 21 HP, 320 mm deep, for 220 mm board depth

Delivery comprises (kit)

Item	Qty 3 U	Qty 6 U	Description
1	2	2	Side panel type H with 19" support bracket (tox-cold welded); prepared for textile EMC gasket
2	2	2	Side panel extension
3	2	2	Ducting external
4	2	2	Front horizontal rail (H-KD)
4 a	2	2	Rear horizontal rail (H-VT)
4 b	-	1	Rear centre horizontal rail (VT)
5	4	6	Threaded inserts
6	1	2	Rear frame 3 U, 21 T
7	2	4	Protective bracket SNCF
8	2	2	Handle
9	1	1	Assembly kit with self-locking screws
10	1	1	User manual

3 U

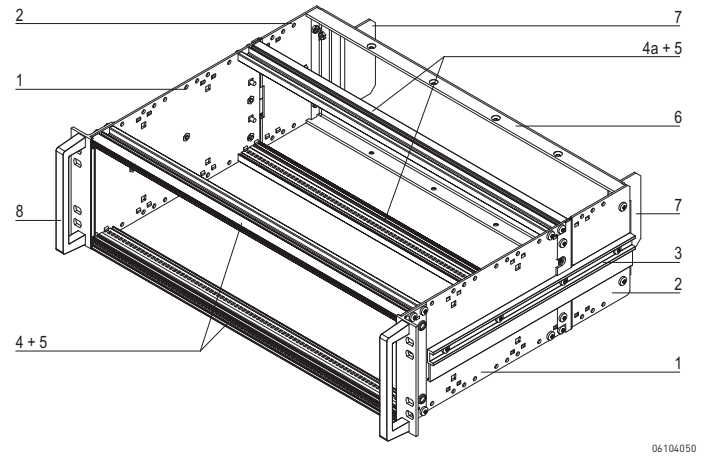

06104050

6 U

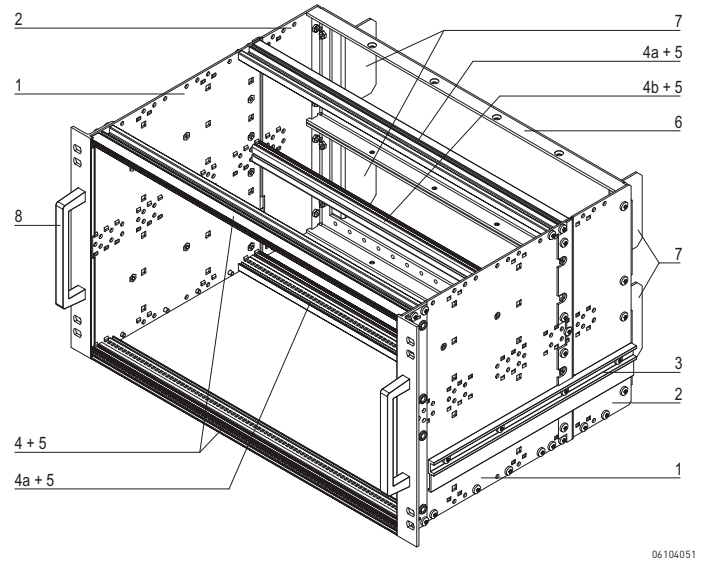

06104051

Order Information

Width mm	Height U	Depth mm	Part no.
36 HP (9 T)	3	320	21500-067
36 HP (9 T)	6	320	21500-070
84 HP (21 T)	3	320	21500-029
84 HP (21 T)	6	320	21500-027

Accessories

Guide rail, standard, 220 mm deep PBT, UL 94 V-0, red, groove width 2 mm, PU 10 pieces, see page 6.36	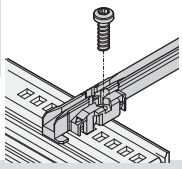	24560-353
Panhead screw with Torx M2.5 x 9.3, St, zinc-plated, self-locking, PU 100 pieces		21500-039
ESD clip for guide rails PU 50 pieces		24560-255
Coding peg for rear frame, St, white zinc-plated, 1 piece		60895-018
19" dual fixing materials kit suitable for a subrack with double fixing holes (bolts, washers and nuts), PU 1 kit		24566-109

Coding peg

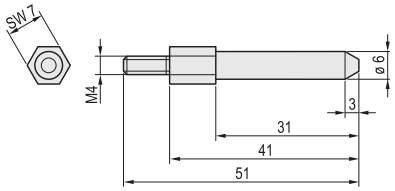

06104062

Note

- fer = ferroviaire = French Railways, 1 T = 4 HP = 20.32 mm
- Receptacle/mounting frame for subracks, stainless steel, 9 T or 21 T on request
- Test reports online
- Cover plates for bolting on to side panel see page 6.82
- ServicePLUS configuration see from page 6.84
- Further accessories see from page 6.17

ServicePLUS see page 6.84

Subracks – europacPRO for railway applications

Kit, SNCF, shielded

06104003

- Subrack, robust "heavy" version, 19" bracket is firmly fixed to side panel (tox-cold welded)
- For mobile railway applications
- SNCF listed, europacPRO-fer, tested to NF F 61-005 and NF F 60-002
- 3 U and 6 U, 9 T and 21 T, 320 mm deep, for 220 mm board depth

3 U

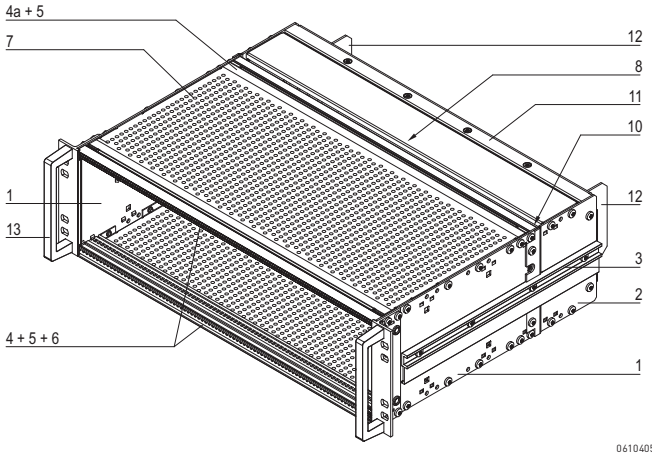

06104052

6 U

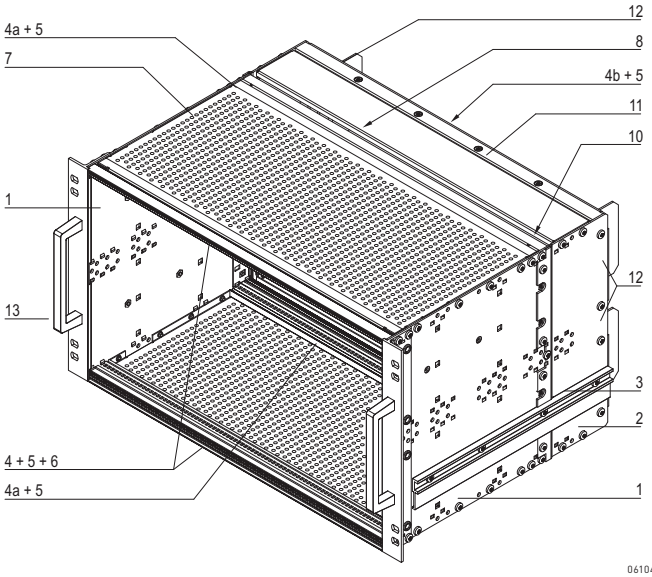

06104053

Coding peg

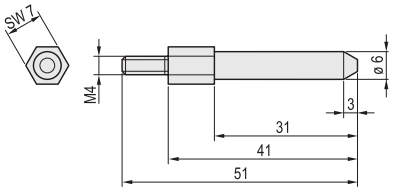

06104062

ServicePLUS see page 6.84

Delivery comprises (kit)

Item	Qty 3 U	Qty 6 U	Description
1	2	2	Side panel type H with 19" support bracket (tox-cold welded); for textile EMC gasket
2	2	2	Side panel extension
3	2	2	Ducting external
4	2	2	Front horizontal rail (H-KD)
4 a	2	2	Rear horizontal rail (H-VT)
4 b	-	1	Rear centre horizontal rail (VT)
5	4	6	Threaded inserts
6	2	2	Perforated strip
7	2	2	EMC cover plate 235 T
8	2	2	Rear cover plate, 55 T
9	1	1	EMC gasketing kit
10	1	2	Backplane kit – EMC shielding material
11	1	2	Rear frame, 3 U, 21 T
12	2	4	Protective bracket SNCF
13	2	2	Handles
14	1	1	Assembly kit with self-locking screws
15	1	1	User manual

Order Information

Width	Height U	Depth mm	Part no.
36 HP (9 T)	3	320	21500-068
36 HP (9 T)	6	320	21500-071
84 HP (21 T)	3	320	21500-030
84 HP (21 T)	6	320	21500-028

Accessories

Guide rail, standard, 220 mm deep PBT, UL 94 V-0, red, groove width 2 mm, PU 10 pieces, see page 6.36	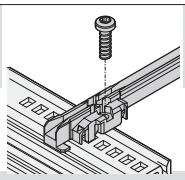	**24560-353**
Panhead screw with Torx M2.5 x 9.3, St, zinc-plated, self-locking, PU 100 pieces		**21500-039**
ESD clip for guide rails PU 50 pieces		**24560-255**
Coding peg for rear frame, St, white zinc-plated, 1 piece		**60895-018**
19" dual fixing materials kit suitable for a subrack with double fixing holes (bolts, washers and nuts), PU 1 kit		**24566-109**

Note

- fer = ferroviaire = French Railways, 1 T = 4 HP = 20.32 mm
- Receptacle/mounting frame for subracks, stainless steel, 9 T or 21 T on request
- Test reports online
- ServicePLUS configuration see from page 6.84
- Further accessories see from page 6.17

Subracks – *europacPRO* for railway applications

Kit, SNCF, shielded, for CompactPCI applications

06104004

- Subrack, robust "heavy" version, 19" bracket is firmly fixed to side panel (tox-cold welded)
- For mobile railway applications
- SNCF listed, europacPRO-fer, tested to NF F 61-005 and NF F 60-002
- 3 U and 6 U, 9 HP and 21 HP, 320 mm deep, for 160 mm board depth
- CompactPCI subrack conforming to 1101.10

3 U

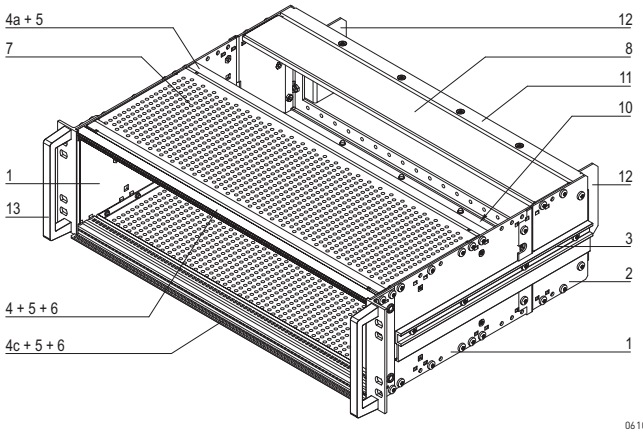

06104054

6 U

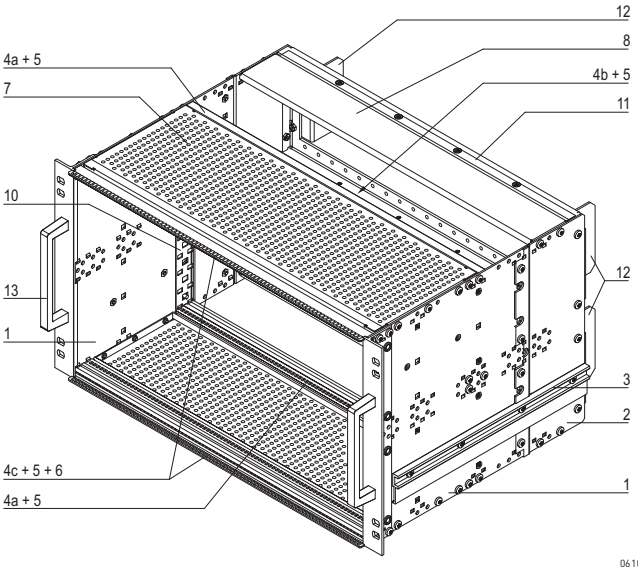

06104055

Coding peg

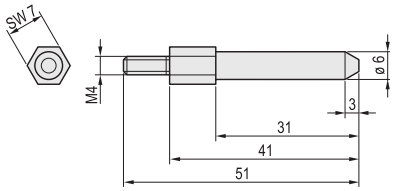

06104062

Delivery comprises (kit)

Item	Qty 3 U	Qty 6 U	Description
1	2	2	Side panel type H with 19" support bracket (tox-cold welded); for textile EMC gasket
2	2	2	Side panel extension
3	2	2	Ducting external
4	1	-	Front horizontal rail (H-KD)
4 a	2	2	Rear horizontal rail (H-VT)
4 b	-	1	Rear centre horizontal rail (VT)
4 c	1	2	Front horizontal rail (H-LD)
5	4	6	Threaded inserts
6	2	2	Perforated strip
7	2	2	EMC cover plate, 175 T
8	2	2	Rear cover plate, 55 T
9	1	1	EMC gasketing kit
10	1	2	Backplane kit – EMC shielding material
11	1	2	Rear frame, 3 U, 21 T
12	2	4	Protective bracket SNCF
13	2	2	Handles
14	1	1	Assembly kit with self-locking screws
15	1	1	User manual

Order Information

Width	Height U	Depth mm	Part no.
36 HP (9 T)	3	320	21500-069
36 HP (9 T)	6	320	21500-072
84 HP (21 T)	3	320	21500-047
84 HP (21 T)	6	320	21500-046
Accessories			
Coding peg for rear frame, St, white zinc-plated, 1 piece			**60895-018**
19" dual fixing materials kit suitable for a subrack with double fixing holes (bolts, washers and nuts), PU 1 kit			**24566-109**

Note

- Please order guide rails and ESD clips separately, see page 6.81
- fer = ferroviaire = French Railways, 1 T = 4 HP = 20.32 mm
- Receptacle/mounting frame for subracks, stainless steel, 9 T or 21 T on request
- Test reports online
- ServicePLUS configuration see from page 6.84
- Further accessories see from page 6.17

ServicePLUS see page 6.84

Subracks – europacPRO for railway applications

Guide rails

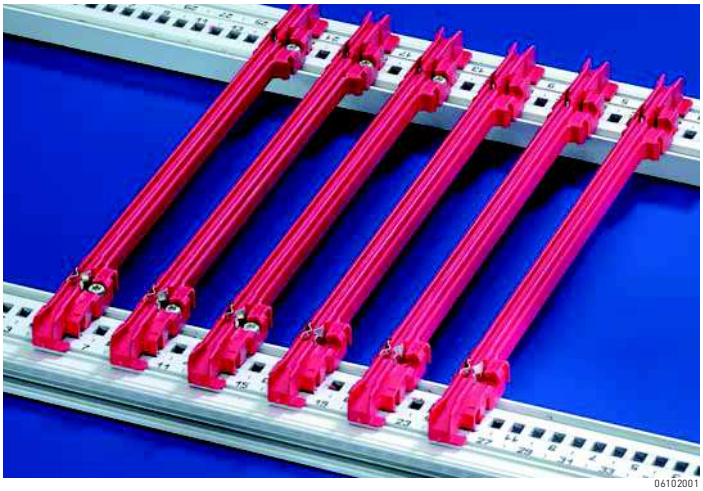

06102001

- Material PBT, UL 94 V-0, red, groove width 2 mm, for 1.6 mm board thickness

Order Information

Description	Depth mm	Qty/PU	Part no.
Guide rails, accessories, 160 mm deep	160	10	**24560-351**
Guide rails, standard, 220 mm deep	220	10	**24560-353**
ESD clip for guide rails PU 50 pieces			**24560-255**

Guide rails with coding for CompactPCI and VME64x

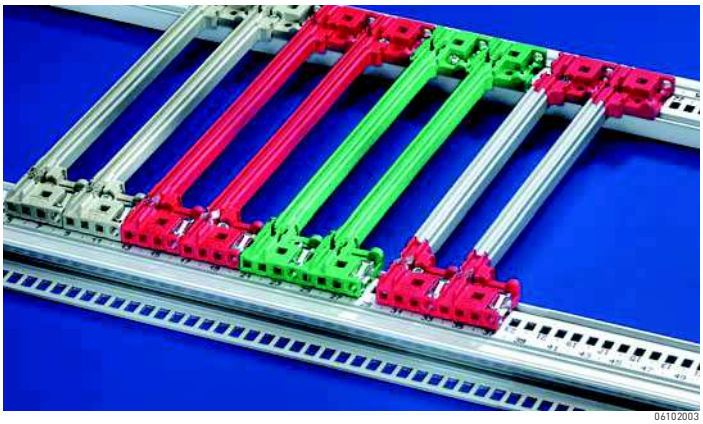

06102003

Guide rails on horizontal rail type H

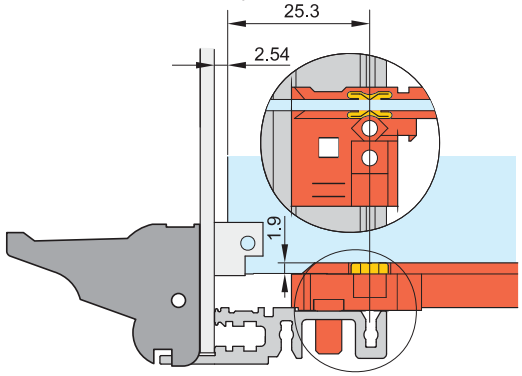

04505050

ESD clip for alignment pin

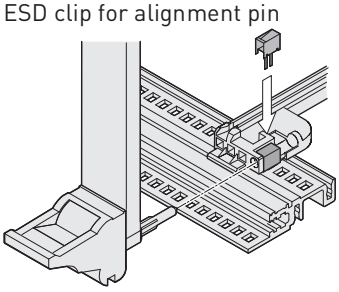

06103052

- The guide rails conform to IEC 60297-3-100 and IEEE 1101.10/11, are 4 HP wide and can be fitted with keying/coding pegs
- Material PBT UL 94 V-0, groove width 2 mm, for board thickness 1.6 mm
- Colour:
  - red (CPU board)
  - grey (periphery board)
  - green (CompactPCI power supply unit, 0.1" offset)

Order Information

Description	Depth mm	Qty/PU	Part no.
Guide rails with coding, red	160	10	**24560-356**
Guide rails with coding, grey	160	10	**24560-358**
Guide rails with coding, green, offset	160	10	**24560-359**
Panhead screw with Torx M2.5 x 9.3, St, zinc-plated, self-locking, PU 100 pieces 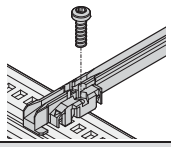			**21500-039**
ESD clip for guide rails PU 50 pieces			**24560-255**
ESD clip for alignment pin of CPCI/VME64x handle PU 50 pieces			**24560-256**
Coding peg PC, UL 94 V-0, RAL 7035, PU 100 pieces			**20817-501**

- More guide rails see page 6.36
- For inserter/extractor handle type IEL/IET for CompactPCI or VME64x applications see Subracks/Plug-in units section, page 7.18

Subracks – europac PRO for railway applications

Cover plate for screw-fixing onto side panel

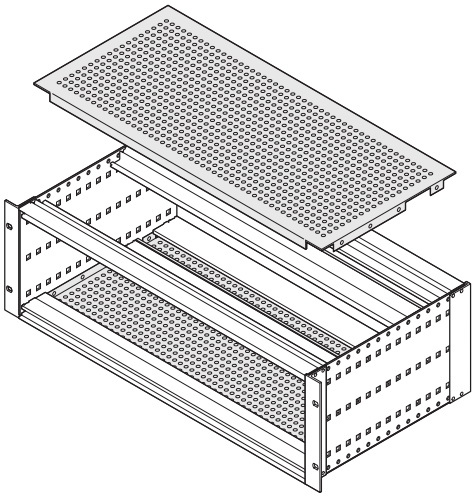

06102084

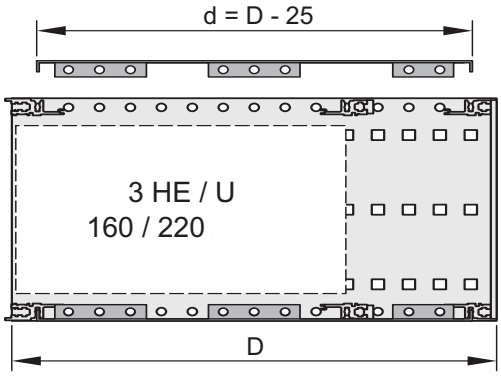

06102082

Side view for 175 mm and 235 mm depths

- Suitable for use with all horizontal rails
- Cover plate for mounting of 160 mm, 220 mm or 280 mm deep PCBs
- Lateral notch to mount the horizontal rails in depths of 160 mm or 220 mm
- Shielding by optional EMC stainless steel contact strips between cover plate and horizontal rail

Delivery comprises

Item	Qty	Description
1	2	Cover plate, Al, 1.0 mm, clear chromated, hole diameter 4.0 mm, (no perforation at 55 mm depth)
2	16/32	Torx M4 x 6 pentaform bolts, St, zinc-plated

Order Information

Width HP	Depth D mm	Application	Part no.
84	55	–	**21500-038**
84	175	160	**21500-048**
84	235	160, 220	**21500-037**
36	55	–	**21500-123**
36	175	160	**21500-124**
36	220	160, 220	**21500-122**

Note

- 4 stainless steel EMC gaskets are necessary per subrack, see page 6.82

EMC gasket (stainless steel) between cover plate and horizontal rail

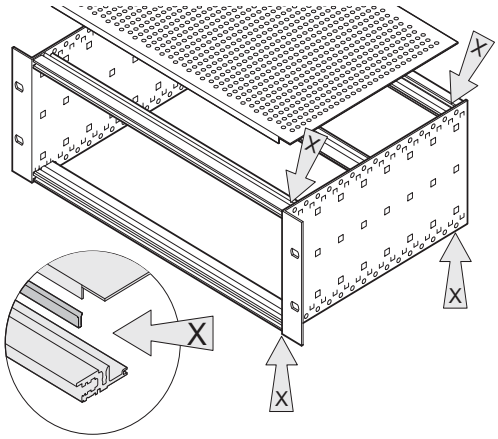

06102052

Assembly tool

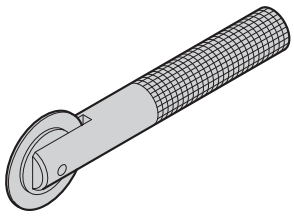

aza45938

- Stainless steel gasket is clipped into horizontal rail and forms the contact cover plate
- Fits all horizontal rails

Order Information

Width HP	Length mm	Qty/PU pieces	Part no.
42	182.4	10	**24560-241**
63	284.0	10	**24560-243**
84	395.7	10	**24560-245**
84	395.7	100	**24560-246**
Assembly tool For mounting of EMC sealing, St, stainless, in horizontal rails, 1 piece			**24560-271**

Note

- When a rear hood is used, the stainless steel EMC gasket ensures the conductive connection between horizontal rail and rear hood

Subracks – europacPRO for railway applications

Coding peg for rear frame (NFF standard)

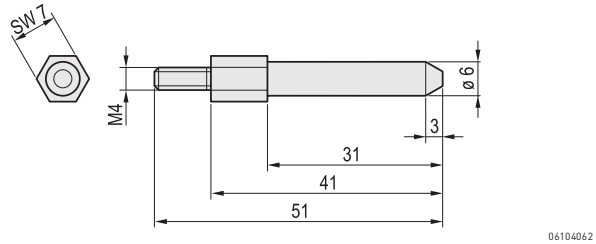

Order Information

Description	Qty/PU	Part no.
Coding peg, St, white zinc-plated	1	**60895-018**

Rear hood for 3 U and 6 U subracks (for stainless steel EMC gasket)

Order Information

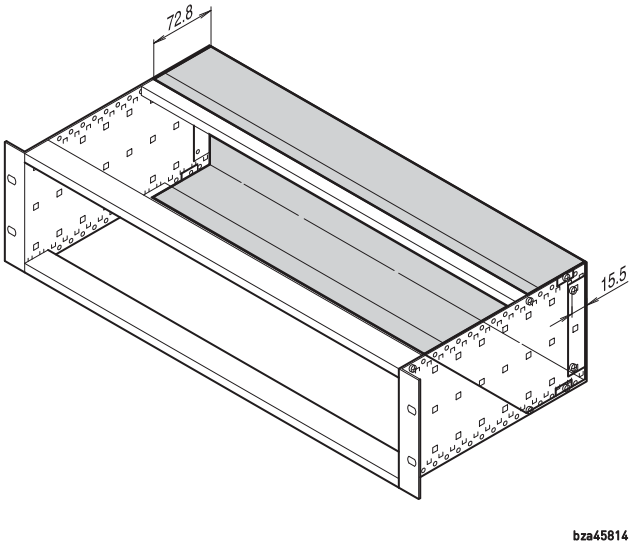

Rear hood

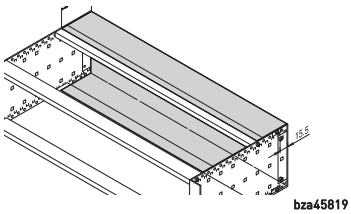

Al, 1 mm, clear passivated;
60 mm additional side panel depth required (board depth + 60 mm);
for shielding please order EMC gasket for horizontal rail separately;
cannot be used simultaneously with rear corner profile

Stainless steel EMC gasket, between cover plate and horizontal rail

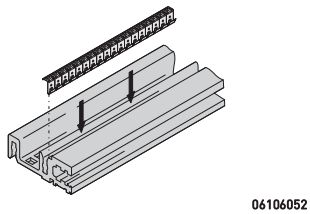

stainless steel EMC gasket,
clips into the horizontal rail and forms the contact with the cover plate;
suitable for all horizontal rails

Height U	Width HP	Rear hood 1 piece	Stainless steel EMC gasket PU 10 pieces
3	42	**34561-750**	**24560-241**
3	84	**34561-752**	**24560-245**
6	63	**34561-763**	**24560-243**
6	84	**34561-764**	**24560-245**
Torx panhead screw, M4 × 6, St, zinc-plated, PU 100 pieces		**24560-135**	–
Assembly tool, For EMC gasket, stainless steel (horizontal rails), 1 piece 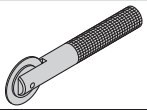		–	**24560-271**

Note

- Other dimensions of rear hood available on request

Subracks – for railway applications ServicePLUS

configuration

Simple. Fast. For the product you want.

Components can be varied and combined freely

- Configuration tables from page 6.17
- Online configuration: www.schroff.co.uk/configuration

assembly

Assembled by professionals. Double benefit!

Fitting of all mechanical, electrical and electronic components by our specialists

- Professional and reliable from quantity 1
- Ready for despatch within 5 working days

modification

Small changes. Large impact.

Custom drillings, cut-outs and special colours for off-the-shelf products

- Custom modifications from quantity 1
- Ready for despatch within 10 working days

solution

Simple. Fast. From one source.

Integration and custom developments

- Special sizes (depth and width)
- Individual heat dissipation concepts
- Ready for despatch within 10 working days

express

When fast has to be faster.

Delivery time to customer's request

- Express logistics

academy

Knowledge. Sharing. Partnerships.

Knowledge transfer and partnership

- Seminars, CAD drawings, test reports, user reports

Subracks – for railway applications ServicePLUS

Application examples

06108006

Application: Subrack receptacle/mounting frame

06108020

Application: Automatic train control system

41108002

Application: Signalling control systems

41108001

Application: Mobile telephony system

Csee_DSCN2296

Application: Control system

01004031

Application: Train control system

Content

Cabinets 1

Wall mounted cases 2

Accessories for cabinets and wall mounted cases . 3

Climate control . 4

Electronics cases 5

Subracks/ 19" chassis 6

Front panels, plug-in units . . . 7

Systems 8

Power supply units 9

Backplanes . . . 10

Connectors, front panel component system 11

Appendix 12

Subracks – europacPRO for industrial applications

06112008

We package your euroboards - even for applications in harsh industrial environments

- A wide range in different dimensions, with finishes for the most diverse applications
- In accordance with the IEC 60297-3-101 and IEEE 1101.1 standards
- Tested to IEC 61587, VG 95373 T15, EN 50155, BN 411002, NF F 67-012, NF F 60-002
- Delivered as a kit in space-saving package or individually assembled and fitted to your specifications

Applications

06112009

Subracks for mounting on mounting plate incl. connection field

06112010

Subracks with special adaptation

Subracks – europacPRO for industrial applications

Overview 6.86

Subrack for industrial applications

- Accommodates electronic boards in industrial applications
- Mounting frame for power distribution modules (connectors, RCD switches, ...)
- Bracket for panel mounting

Introduction 6.4

06112002

Subrack for mounting on a mounting plate

- Height 3 U, width 28 HP, depth 205 mm
- For mounting on mounting plate
- For direct mounting of backplanes or to fit DIN plugs, DIN 41612/EN 60603-2

Subrack for wall mounting .. 6.88

01494031

Module support

- Height 3 U, width 84 HP, depth 115 mm
- Power distribution modules to mount on lipped horizontal rail in accordance with DIN 43880

Module support 6.89

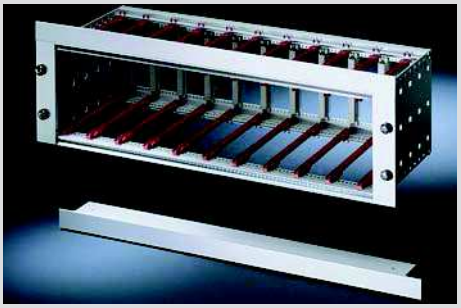

06197021

Bracket for mounting subracks in a panel

- Bracket widths 42 and 84 HP

Bracket for panel mounting 6.90

Accessories

- Accessories (e.g. lipped rail adaptor, horizontal rails)

Accessories 6.91

30407004

ServicePLUS from page 6.18 / 6.84

e.g. modification (cut-outs)
e.g. downloads (CAD drawings, user manuals, test reports)
e.g. custom solutions (special depths, electromagnetically shielded applications)

www.schroff.biz/ServicePLUS

ServicePLUS ... 6.18
Application examples 6.85

europacPRO ... 6.6
Subracks for mobile railway applications 6.70
europacPRO for rugged applications 6.92

Subracks – europacPRO for industrial applications

europacPRO subrack, unshielded

06112001

Illustration shows subrack without rear hood

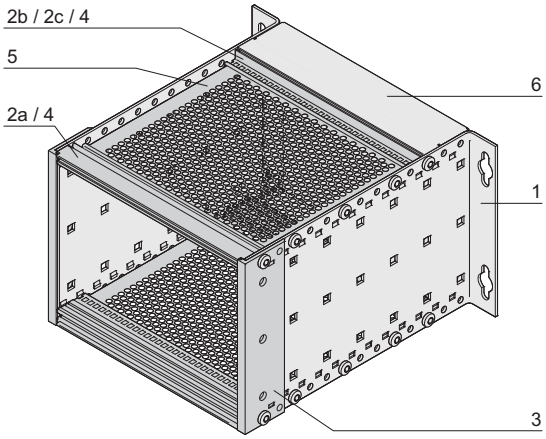

06112050

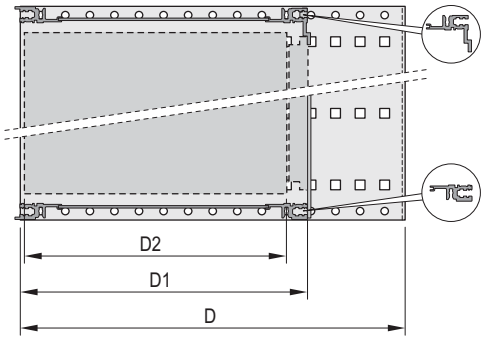

06112051

Connector/backplane mounting;
D=overall depth, D1=insertion depth,
D2=board depth = D1 - 15 mm

04400003

Horizontal rail to rear for connector mounting

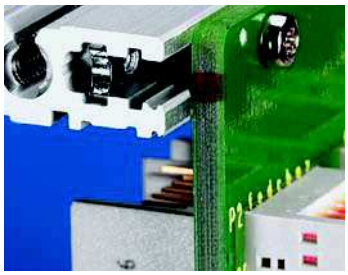

04400002

Horizontal rail to rear for direct backplane mounting

- Subrack to mount on the wall or on mounting plate
- For mounting of euroboards to IEC 60297-3-101 in size 3 U, 160 mm deep
- Versions
  - For connector mounting (DIN 41612, EN 60602-3), with/without rear panel
  - For backplane mounting, with/without rear hood

NEW

Delivery comprises

Item	Qty	Description
1	2	Side panel, 3 U, Al, 2 mm with integrated wall-mounting bracket
2a	2	Front horizontal rail (L-KD)
2b	2	Rear horizontal rail (L-RC) for backplane mounting
2c	2	Rear horizontal rail (L-MZ) for connector mounting
3	2	Rear angle
4	2/4	Threaded insert, St, zinc-plated
5	2	Cover plate, pushed in
6	1	Rear hood, Al, 1 mm (only for version with rear hood)
7	1	Fixing materials kit, user manual

Order Information

Description	Height U	Width HP	Depth D mm	Depth D1 mm	Part no.
With rear panel, for connector mounting	3	28	205	175	**24563-110**
Without rear panel, for connector mounting	3	28	205	175	**24563-109**
With rear panel, for direct backplane fixing	3	28	205	175	**24563-108**
Without rear panel, for direct backplane fixing	3	28	205	175	**24563-107**
Accessories					
Guide rails, accessories, 160 mm deep PBT, UL 94 V-0, red, groove width 2 mm, PU 10 pieces					**24560-351**
Front panels					**Page 7.5**
Front panel with handle					**Page 7.16**

Note

- EMC version on request

Subracks – europacPRO for industrial applications

19" module support, support rail to DIN 43880, hood

Order Information

	19" module support			
01494031	to accommodate power distribution modules 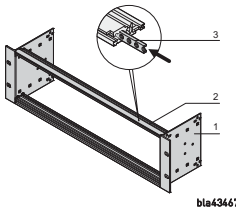 bla43467	Support rails to DIN 43880 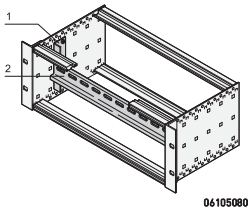 06105080	Front panel for 19" module support 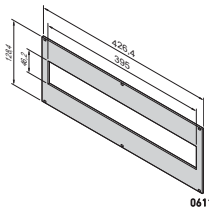 06111053	Hood 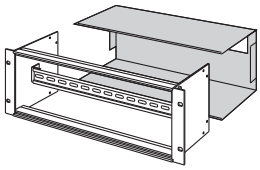 BLA43492
	3 U, 84 HP, 115.5 mm deep; 2 side panels Al, 2 mm; 2 horizontal rails with short lip (L-KD), Al extrusion, surface anodised, contact surfaces conductive; 2 threaded inserts, St, zinc-plated; GND/earthing kit; fixing material kit; Please order support rail separately	2 adaptor brackets, Al, 2 mm; support rail, St, zinc-plated, (35/7.5 mm); for width 84 HP (430.5 mm); Mounted in module support or subrack on the side panel	3 U, 84 HP, Al, 2.5 mm, front anodised, rear iridescent green chromated; GND/earth connection 6.3 mm FASTON; (cut-out 395 mm x 46.2 mm); two blanking plates, plastic, polyester, colour similar to RAL 7035; to cover unused module slots	Al, 1 mm, with brush strip; is bolted to the rear of the module support; GND/earthing kit
	PU 1 kit	PU 1 kit	1 piece	1 piece
	24563-100	24565-100	24563-096	24564-100

Accessories

- Power distribution modules see page 3.34

Subracks – europac PRO for industrial applications

Bracket for panel mounting

Order Information

06197021

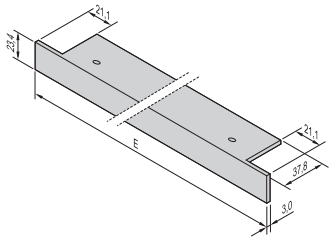

06105067

Usable width HP	Length mm	Bracket (mounting angle) 1 piece
42	269.2	34561-777
84	482.6	34561-779
Torx panhead screw 2.5 × 9.3, zinc-plated, PU 100 pieces		24560-141

Al extrusion, anodised; serves as front visual cover of subrack at top and bottom when fitted into a panel; screwed in from the front with the horizontal rail; 2 brackets and 4 screws are required per subrack

Note

- Further widths available on request

Assembly cut-out

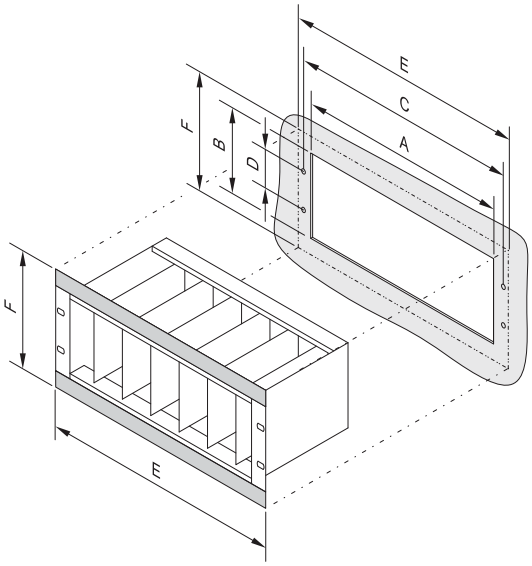

06105066

Dimensions table

U	HP	A mm	B mm	C mm	D mm	E mm	F mm
3	42	237.0	145.0	252.0	57.15	269.2	179.4
3	63	343.0	145.0	358.5	57.15	375.9	179.4
3	84	450.0	145.0	465.0	57.15	482.6	179.4
6	42	237.0	278.5	252.0	190.5	269.2	312.7
6	63	343.0	278.5	358.5	190.5	375.9	312.7
6	84	450.0	278.5	465.0	190.5	482.6	312.7

Subracks – europacPRO for industrial applications

Adaptor for horizontal rail mounting

04812021

- For mounting e.g. small subracks, small wall mounted cases, frame type plug-in units or PSUs on a horizontal rail with lip
- Adaptor is bolted to the desired product and can then be clipped to the lipped horizontal rail (DIN 43880)

Delivery comprises

Item	Qty	Description
1	1	Adaptor, Al extrusion, length 160 mm
1	1	Assembly kit

Order Information

Description	Part no.
Adaptor for horizontal rail mounting	**11000-002**

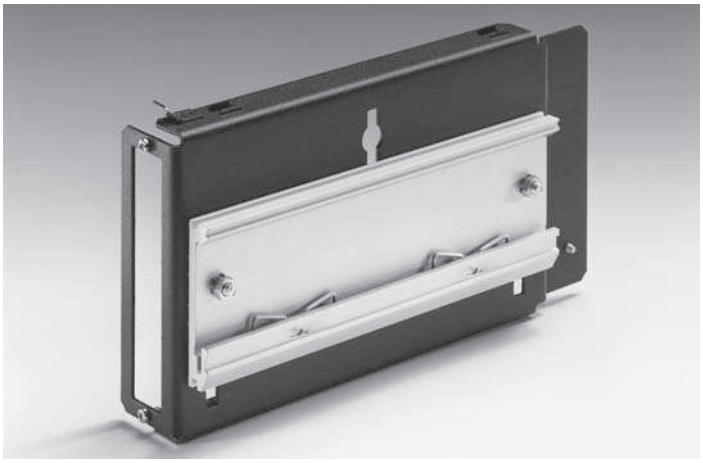

11395007

Example: Lipped horizontal rail adaptor for 19" PSU

Content

Subracks – europacPROrugged

Cabinets 1

Wall mounted cases 2

Accessories for cabinets and wall mounted cases . 3

Climate control . 4

Electronics cases 5

Subracks/ 19" chassis 6

Front panels, plug-in units ... 7

Systems 8

Power supply units 9

Backplanes ... 10

Connectors, front panel component system 11

Appendix 12

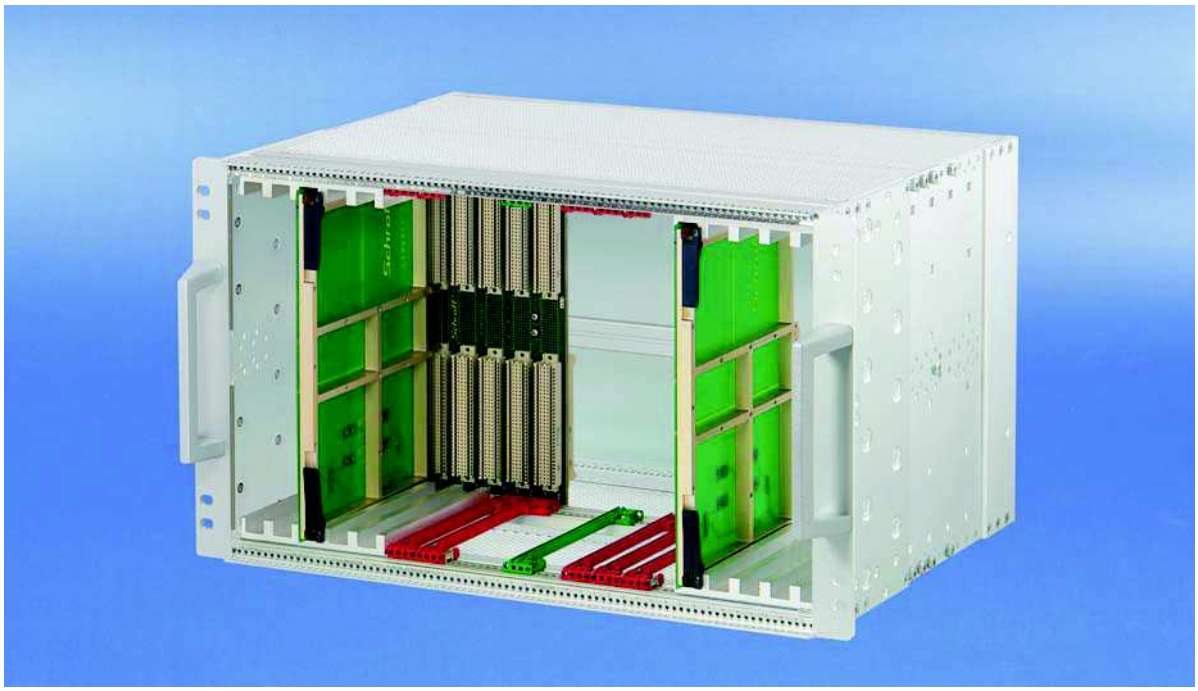

06112020

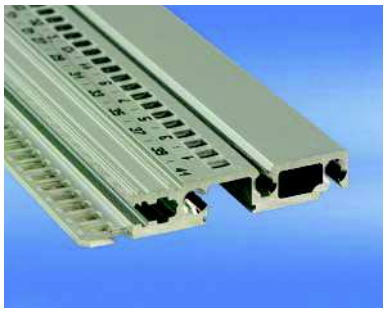

06112004

"rugged" horizontal rail with 3 hole fixing for increased stability (+60 % compared to 2 hole fixing of "heavy" horizontal rail)

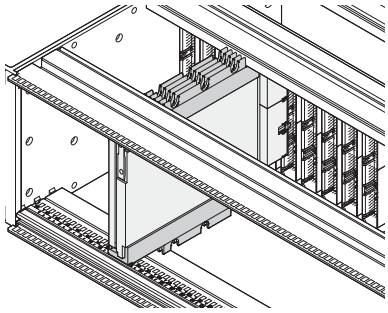

06112052

Special adaptor rails allow conducted cooled assemblies to be fitted

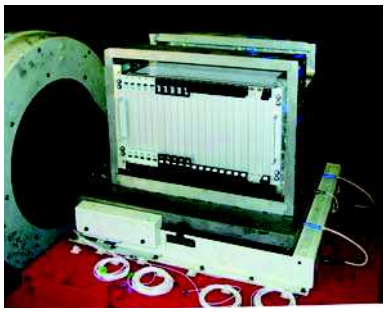

Y-axis_001a1

Shock and vibration resistant in all three axial directions

Standards/Approvals

- Internal and external dimensions in accordance with:
  IEC 60297-3-100, -101, - 102, -103, -104, -105, IEEE 1101.1, IEEE 1101.10/11
- Type of protection IP 20, in accordance with IEC 60529
- EMC testing to IEC 61587-3
- Shock and vibration test report;
  MIL 167, IEC 61587 DL 3,
  MIL 810 G, MIL 901

Note

- Other finishes e.g. yellow chromated on request
- Subrack with telescopic slides can be adapted for cabinet mounting on request

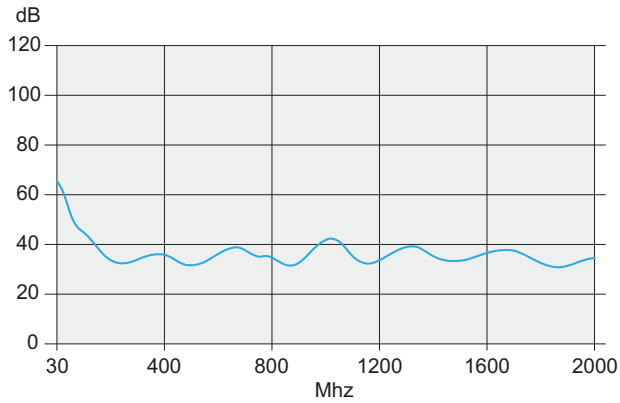

06108081

EMC curve

Subracks – europacPROrugged

Overview 6.92

19" subracks

- Shock and vibration resistant up to 25 g
- Kits or individually configured subracks
- A product and accessory platform for the most different customers' requirements and applications
- Suitable for CompactPCI and VMEbus insertion and extractor handles
- EMC shielding can easily be retrofitted
- 3D PDF or CAD 3D data available for download

Introduction 6.4

06112017

Kits

- All required parts are available under one part number, even partly assembled
- Most popular versions and dimensions available from stock
- For installed loads over 15 kg up to 60 kg
- Supplied as a space-saving flat pack

Kits 6.94

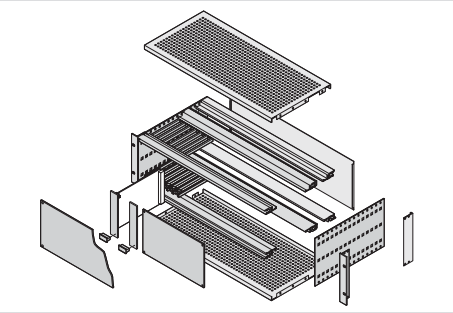

06105058

ServicePLUS individual configuration

- Single parts may individually be configured, respectively assembled on request (from quantity 1)
- Wide range of variants in heigth, width and depth
- Guide rails for different applications
- EMC shielding material to improve EMC performance
- Other accessories and assembly kits

Individual configuration ... 6.97

30407004

ServicePLUS from page 6.95

e.g. modification (cut-outs)
e.g. downloads (CAD drawings, user manuals, test reports)
e.g. custom solutions (special depths, electromagnetically shielded applications)

www.schroff.biz/ServicePLUS

ServicePLUS 6.95
Application examples 6.71
europacPRO 6.6
Subracks for mobile railway applications 6.70
europacPRO for industrial applications 6.86

Subracks – *europac PRO* rugged

Kit, rugged, shielded, for backplane mounting

06112017

Illustration shows 3 U subrack

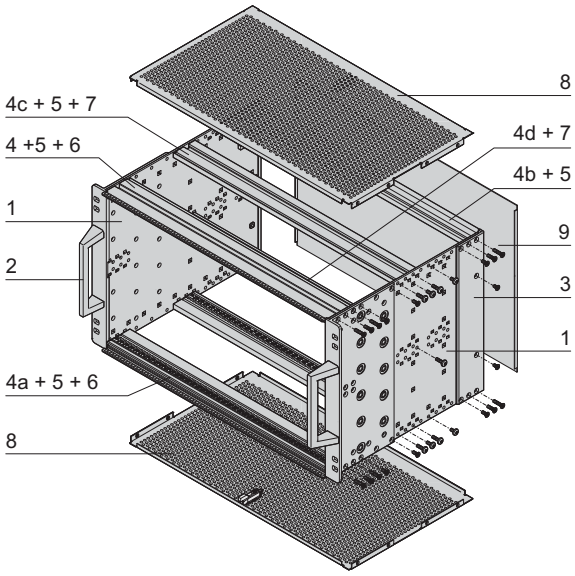

06112055

6 U

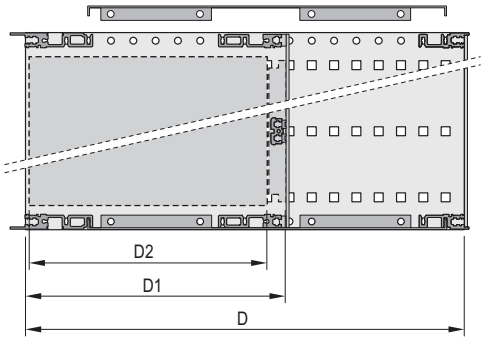

06112054

D = overall depth, D1 = insertion depth,
D2 = board depth = D1 - 15 mm

04400001

Rear horizontal rail for backplane mounting with insulation strip

- Subrack with robust side panel and horizontal rail, type R "rugged"
- Rear horizontal rail for backplane mounting with insulation strip
- Shielding typically 40 dB at 1 GHz, 30 dB at 2 GHz (as per VG 95373, part 15), on condition that the front is closed with sealed front panels
- Shock and vibration resistant to 25 *g*

NEW

Delivery comprises (Kit)

Item	Qty 3 U	Qty 6 U	Description
1	2	2	Side panel type R, Al, 3 mm, clear passivated, with 19" support bracket 3.5 mm (tox-cold welded); for EMC gasketing (textile)
2	2	2	Front handle incl. fixing material kit
3	2	2	Rear corner profile for EMC gasketing (textile)
4	1	-	Front horizontal rail (R-KD)
4a	1	2	Front horizontal rail (R-LD)
4b	2	2	Rear horizontal rail (H-KD)
4c	2	2	Rear horizontal rail, centre (R-ST)
4d	-	1	Rear horizontal rail, centre (ST)
5	6	8	Threaded insert (pre-fitted)
6	2	2	Perforated strip (pre-fitted)
7	2	4	Insulation strip (pre-fitted)
8	2	2	EMC cover plate, rugged, with top cover locking
9	1	1	EMC rear panel
10	1	1	EMC gasketing material, fixing material kit, user manual

Order Information

Height U	Width HP	Depth D mm	Depth D1 mm	Part no.
3	84	295	175	**24567-149**
6	84	295	175	**24567-449**
Accessories				
Guide rails, accessories, 160 mm deep PBT, UL 94 V-0, red, groove width 2 mm, PU 10 pieces				**24560-351**
Torx panhead screw 2.5 × 9.3, zinc-plated, PU 100 pieces; torque max. 0.2 Nm				**24560-141**
ESD clip for guide rails PU 50 pieces				**24560-255**
Guide rail accessories for heavy PCBs, extra strong Al extrusion, groove width 2 mm, 160 mm deep, 1 piece (SPQ 10)				**34562-881**
Torx pan head screw 2.5 × 7.3, zinc flake coating, black, 100 pieces; torque max. 0.2 Nm				**24560-157**
Adaptor to accomodate conduction cooled assemblies (CCA) for VPX applications, 160 mm deep, PU 1 pair; includes fixing material kit				24566-004
Adaptor to accomodate conduction cooled assemblies (CCA) for CompactPCI applications, 160 mm deep, PU 1 pair; includes fixing material kit				24566-005
19" dual fixing materials kit suitable for a subrack with double fixing holes (bolts, washers and nuts), PU 1 kit				**24566-109**

Note

- Test reports online
- For further accessories see from page 6.19

Subracks – europacPRO rugged ServicePLUS

configuration

Simple. Fast. To the ideal product.

Components can be varied and combined freely

- Configuration tables from page 6.96
- Online configuration: www.schroff.co.uk/configuration

assembly

Assembled by professionals. Double benefit!

Fitting of all mechanical, electrical and electronic components by our specialists

- Professional and reliable from quantity 1
- Ready for despatch within 5 working days

modification

Small changes. Large impact.

Custom drillings, cut-outs and special colours for off-the-shelf products

- Custom modifications from quantity 1
- Ready for despatch within 10 working days

solution

Simple. Fast. From one source.

Integration and custom developments

- Special sizes (depth and width)
- Individual heat dissipation concepts
- Ready for dispatch within 10 working days

express

When fast has to be faster.

Delivery time to customer's request

- Express logistics

academy

Knowledge. Sharing. Partnerships.

Knowledge transfer and partnership

- Seminars, CAD drawings, test reports, user reports

Subracks – europacPROrugged ServicePLUS

Overview of individual components for shielded or unshielded subracks

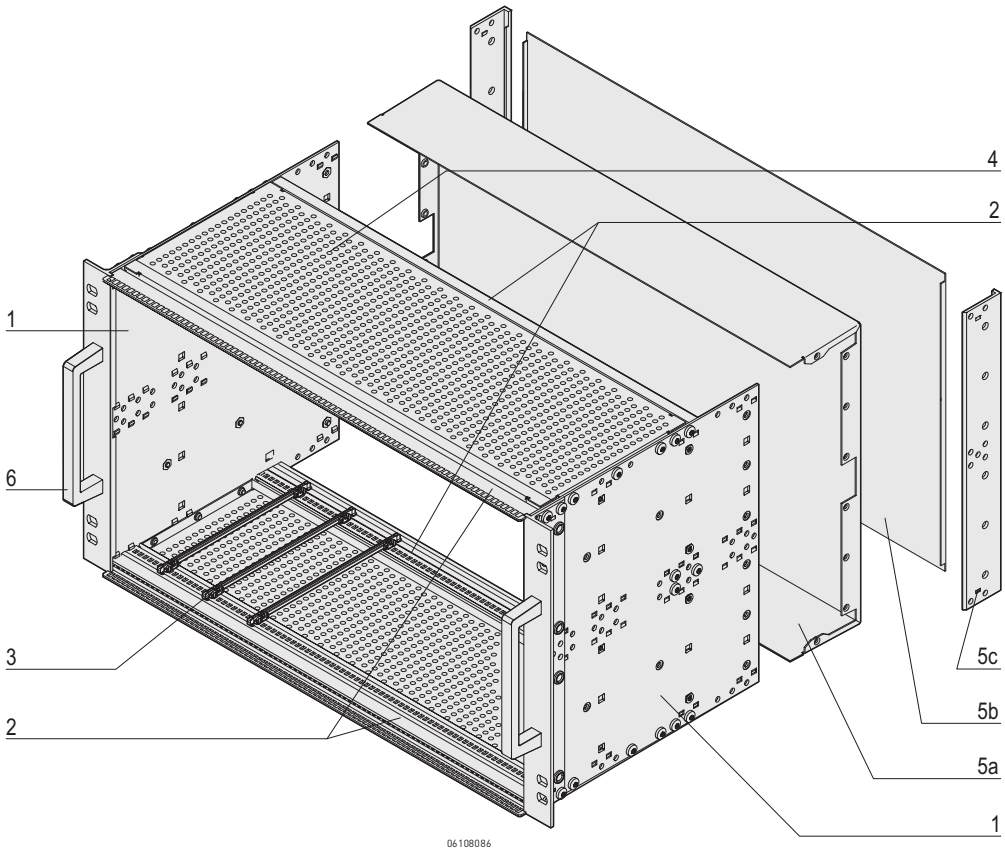

Item	Description	Description	page
Item 1	Side panels	Establish the height and depth of the subrack; Al, 3 mm, with universal hole positions for mounting of accessories	6.97
Item 2	Horizontal rails	Establish the width of the subrack; Al extrusion, with defined hole positions for guide rails, grooves for threaded inserts, M4 thread at front, functional rail shapes, basically differing with regard to their mechanical loading capacity: rugged loading up to 15 kg	6.98
Item 3	Guide rails	Guide rails act as interface between subracks and boards, for different board formats, are available in plastic or metal, optionally codable and optionally can be fitted with ESD clip to allow electrostatic discharge	6.105
Item 4	Cover plates	Provide mechanical protection and/or EMC shielding and are perforated	6.108
Item 5	Rear/front	Rear hood (5a) or front panel (5b) with corner profile (5c) as support for EMC shielding gaskets used in conjunction with shielded front panels; Note: rear hood and corner profile cannot be fitted simultaneously	6.49
Item 6	Handles	Handles can be mounted on the 19" brackets	6.97
–	EMC shielding (without illustration)	Extensive component range for specific shielding of subrack according to your application	6.110
–	Internal mounting (without illustration)	Universal assemblies, e.g. for horizontal and vertical mounting and for mounting plates	6.109 6.60

Subracks – europac PRO rugged ServicePLUS

Side panel type R, EMC sealing, corner profile, front handle

Order Information

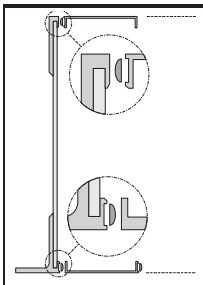 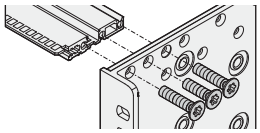 06112054 06112056	Side panel type R for textile gasket 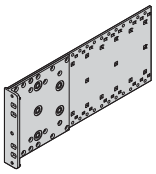 06112059	EMC textile gasket 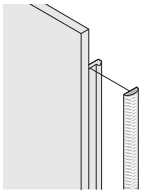 04602054	Corner profile, rugged 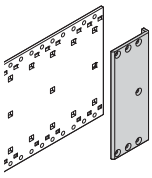 06112058	Front handle 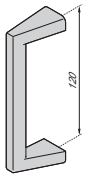 06112057
	Side panel, Al 3 mm, tox-cold welded with 19" Al bracket, 3.5 mm with handle hole, clear passivated, front anodised; please order front handles separately	Textile gasket, core: foam, sleeve: textile cladding with CuNi coating, UL 94 V-0, temperature range -40 ... 70 °C	Al extrusion, 3 mm, finish clear passivated; with lateral grooves for EMC stainless steel gasket; rear hood cannot be used simultaneously	Die-cast Al profile, powder-coated, RAL 9006; load-carrying capacity 30 kg, fixing material kit
Height U / Depth mm	PU 1 pair	PU 10 pieces	PU 1 pair	PU 1 kit
3 / 175	24568-145	**21101-853**	24566-199	24566-010
3 / 235	24568-147			
3 / 275	24568-143			
3 / 277.75	24568-144			
3 / 295	24568-149			
3 / 355	24568-151			
6 / 175	24568-445	**21101-855**	24566-499	24566-010
6 / 235	24568-447			
6 / 275	24568-443			
6 / 277.75	24568-444			
6 / 295	24568-449			
6 / 355	24568-451			

Fixing material kits see page 6.103

Side panel, type R

- For high mechanical demands up to 25 *g* (vibration resistance, shock and vibration requirements to e.g. IEC 61587-DL 3)
- 19" bracket is fixed firmly to side panel (tox-cold welded)
- Height 3 U and 6 U
- Depths 175, 235, 275, 277.75, 295 and 355 mm
- EMC shielding concept for front/rear with EMC textile gasket
- Other dimensions on request

Subracks – europacPROrugged ServicePLUS

Mounting position of horizontal rail/central rails

3 U (board depth 160, 220, 280 mm)

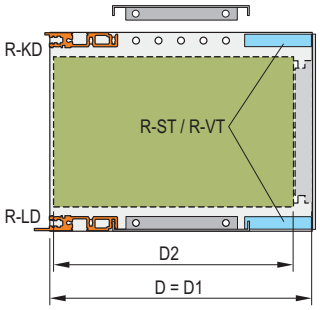

06112061

6 U (board depth 160, 220, 280 mm)

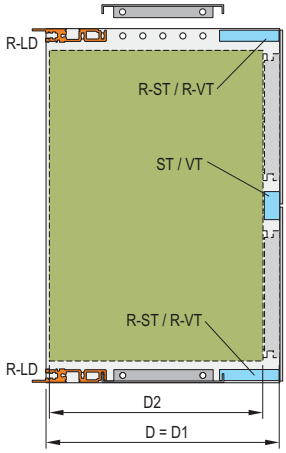

06112062

3 U (board depth 160, 220, 280 mm)

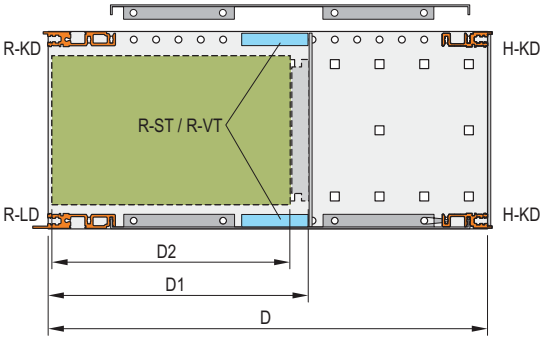

06112063

6 U (board depth 160, 220, 280 mm)

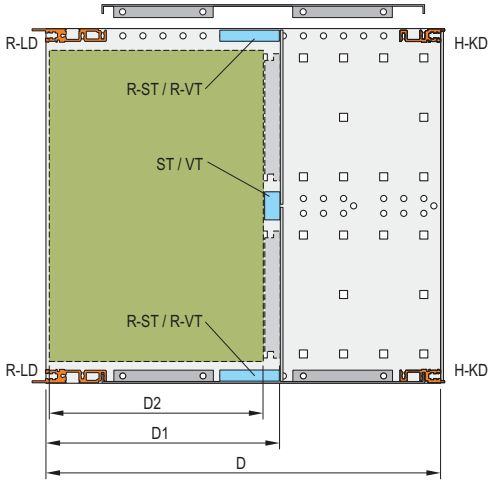

06112064

3 U (for CompactPCI/VME64x applications)

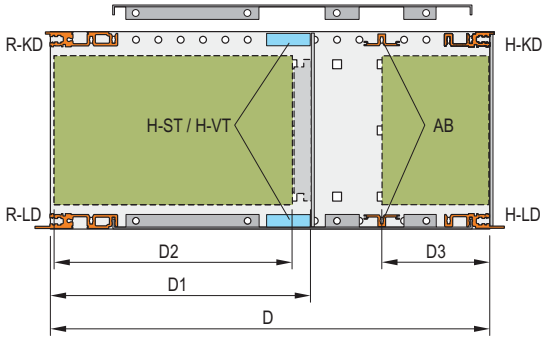

06112065

6 U (for CompactPCI/VME64x applications)

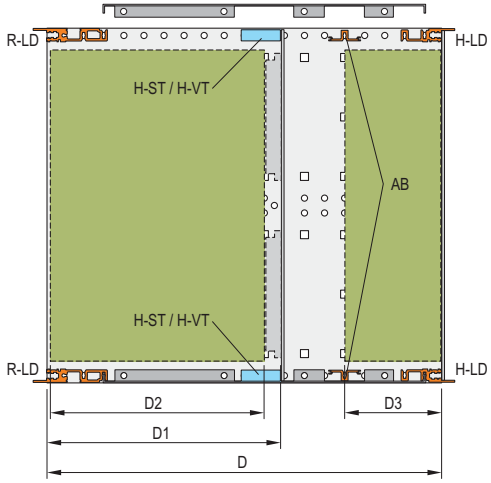

06112066

Horizontal rails

R-ST

06112070

R-VT

06112071

H-ST

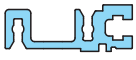

06112072

H-VT

06112073

ST

06112074

VT

06112075

Subracks – europacPROrugged ServicePLUS

Front horizontal rails

Order Information

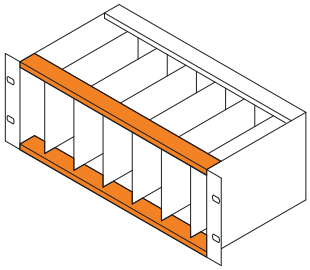 bza44980	With long lip for insertion/ extraction of CompactPCI and VME64x boards "rugged" Type R-LD long lip 06112004	With long lip for insertion/ extraction of CompactPCI and VME64x boards "heavy" Type H-LD long lip 06197008	With short lip "rugged" Type R-KD short lip 06112013	With short lip "heavy" Type H-KD short lip 06197008
With HP markings from 28 HP, Al extrusion, anodised finish, conductive contact surface	Al extrusion, anodised finish, conductive contact surface, with HP markings	Al extrusion, anodised finish, conductive contact surface, with HP markings	Al extrusion, anodised finish, conductive contact surface, with HP markings	Al extrusion, anodised finish, conductive contact surface, with HP markings
Usable length HP / Length mm	1 piece (SPQ 10)[1]	1 piece (SPQ 10)[1]	1 piece (SPQ 10)[1]	1 piece (SPQ 10)[1]
20 / 106.68	34566-320	**34560-320**	34566-220	**34560-220**
28 / 147.32	34566-328	**34560-328**	34566-228	**34560-228**
40 / 208.28	34566-340	**34560-340**	34566-240	**34560-240**
42 / 218.44	34566-342	**34560-342**	34566-242	**34560-242**
63 / 325.12	34566-363	**34560-363**	34566-263	**34560-263**
84 / 431.80	34566-384	**34560-384**	34566-284	**34560-284**
– / 1000	34566-301	**34560-301**	34566-201	**34560-201**
Cover strips to cover the horizontal rail perforations Al, untreated, 0.8 mm, length 431.5 mm, 1 piece (SPQ 10) 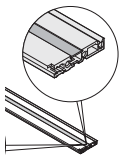	**34566-184**	–	**34566-184**	–
Threaded inserts see page	6.104	6.104	6.104	6.104
Fixing material kits see page	6.103	6.103	6.103	6.103

1) SPQ (standard pack quantity): Part number includes 1 piece, but delivery is exclusively made in standard pack quantity (SPQ); please order at least the SPQ quantity or a multiple
"heavy" load > 7.5 kg; "rugged" load > 15 kg;

Note

- 1000 mm version without M4 thread to front, without printing and without notch for 19"-bracket
- EMC gasket see page 6.56
- For further horizontal rails see page 6.29

Subracks – europacPROrugged ServicePLUS

Rear horizontal rails

Order Information

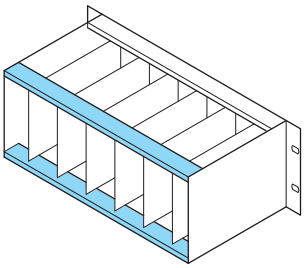

06105074

With HP markings from 28 HP, Al extrusion, anodised finish, conductive contact surface

		For indirect backplane fixing with insulation strip		For direct backplane fixing		For direct fixing of connectors in accordance with EN 60603-2 (DIN 41612)
		04400001		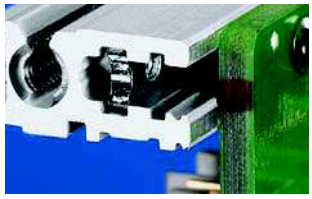 04400002		04400003
		"rugged" Type R-ST Standard	"heavy" Type H-ST standard	"rugged" Type R-VT recessed installation	"heavy" Type H-VT recessed installation	"heavy" Type H-MZ with Z-rail
		06112005	06197011	06112006	06197013	06197015
		Al extrusion, anodised finish, conductive contact surface, with HP markings	Al extrusion, anodised finish, conductive contact surface, with HP markings	Al extrusion, anodised finish, conductive contact surface, with HP markings	Al extrusion, anodised finish, conductive contact surface, with HP markings	Al extrusion, anodised finish, conductive contact surface, with HP markings
Usable length HP	Length mm	1 piece (SPQ 10)[1]	1 piece (SPQ 10)[1]	1 piece (SPQ 10)[1]	1 piece (SPQ 10)[1]	1 piece (SPQ 10)[1]
20	106.68	34566-520	**34560-520**	34566-720	**34560-720**	**34560-920**
28	147.32	34566-528	**34560-528**	34566-728	**34560-728**	**34560-928**
40	208.28	34566-540	**34560-540**	34566-740	**34560-740**	**34560-940**
42	218.44	34566-542	**34560-542**	34566-742	**34560-742**	**34560-942**
63	325.12	34566-563	**34560-563**	34566-763	**34560-763**	**34560-963**
84	431.80	34566-584	**34560-584**	34566-784	**34560-784**	**34560-984**
–	1000	34566-501	**34560-501**	34566-701	**34560-701**	–
Insulation strips see page		6.104	6.104	–	–	–
Threaded inserts see page		6.104	6.104	6.104	6.104	6.104
Fixing material kits see page		6.103	6.103	6.103	6.103	6.103

1) SPQ (standard pack quantity): Part number includes 1 piece, but delivery is exclusively made in standard pack quantity (SPQ); please order at least the SPQ quantity or a multiple
"heavy" load > 7.5 kg; "rugged" load > 15 kg;

Note

- 1000 mm version without M4 thread to front, without printing and without notch for 19"-bracket
- EMC gasket see page 6.56
- For further horizontal rails see page 6.29

Subracks – europacPROrugged ServicePLUS

Rear horizontal rails, centre, for 6 U

Order Information

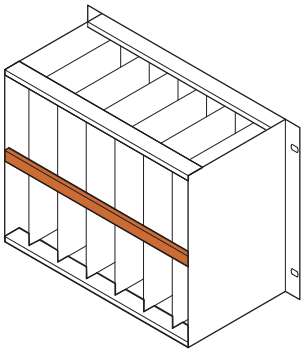 06108090		For indirect backplane fixing with insulation strip 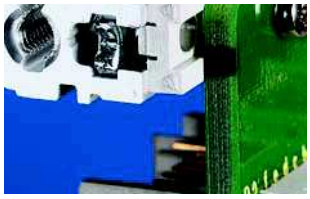 04400001 Type ST 06197016 Al extrusion, finish anodised, conductive contact surface; without markings	For direct backplane fixing 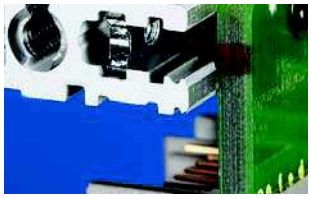 04400002 Type VT 06197017 Al extrusion, finish anodised, conductive contact surface; without markings	For direct fixing of connectors in accordance with EN 60603-2 (DIN 41612 04400003 Type MZ 06197018 Al extrusion, finish anodised, conductive contact surface; without markings
Usable length HP	Length mm	1 piece (SPQ 10)[1]	1 piece (SPQ 10)[1]	1 piece (SPQ 10)[1]
20	106.68	**34561-020**	**34561-120**	**34561-220**
28	147.32	**34561-028**	**34561-128**	**34561-228**
40	208.28	**34561-040**	**34561-140**	**34561-240**
42	218.44	**34561-042**	**34561-142**	**34561-242**
63	325.12	**34561-063**	**34561-163**	**34561-263**
84	431.80	**34561-084**	**34561-184**	**34561-284**
–	1000	**34561-001**	**34561-101**	**34561-201**
Insulation strips see page		6.104	–	–
Threaded inserts see page		6.104	6.104	6.104
Fixing material kits see page		6.103	6.103	6.103

1) SPQ (standard pack quantity): Part number includes 1 piece, but delivery is exclusively made in standard pack quantity (SPQ); please order at least the SPQ quantity or a multiple
"heavy" load > 7.5 kg; "rugged" load > 15 kg;

Note

- All horizontal rails without printed markings
- 1000 mm version without M4 thread to front

Subracks – europacPROrugged ServicePLUS

Horizontal rails (type AB) for rear I/O applications

Order Information

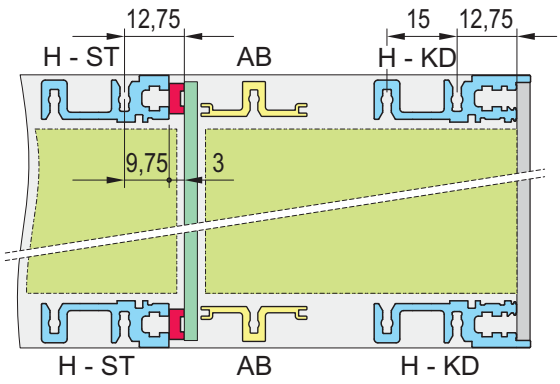

06108069

For CompactPCI in rear I/O area

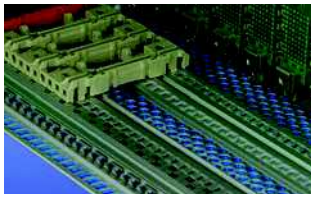

06108009

Type AB

06197019

Al extrusion, finish anodised, conductive contact surface; horizontal rail type AB (AB = support) is required to fix the guide rails for the 80 mm rear I/O boards; without markings

Usable length HP	Length mm	1 piece (SPQ 10)[1]
20	106.68	34561-520
28	147.32	34561-528
40	208.28	34561-540
42	218.44	34561-542
63	325.12	34561-563
84	431.80	34561-584
–	1000	34561-501
Fixing material kits see page		6.103

1) SPQ (standard pack quantity): Part number includes 1 piece, but delivery is exclusively made in standard pack quantity (SPQ); please order at least the SPQ quantity or a multiple
"heavy" load > 7.5 kg; "rugged" load > 15 kg;

Note

- All horizontal rails without printed markings
- 1000 mm version without M4 thread in end

Subracks – europacPROrugged ServicePLUS

Screws overview

	Description	Material	Dimension	Qty/PU	Part no.
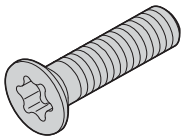 06712051	Countersunk screw, with thread locking compound **Application:** Rugged side panel to horizontal rail; for area of tox-cold welded brackets and corner profiles except when guide rail is fitted to slot 1	Stainless steel	M4 x 18	100	24566-100
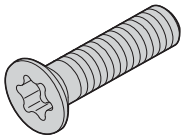 06712051	Countersunk screw, with thread locking compound **Application:** Rugged side panel to horizontal rail; for area of tox-cold welded brackets and corner profiles if guide rail is fitted to slot 1	Stainless steel	M4 x 14	100	24566-101
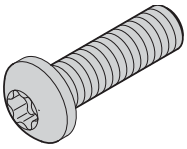 aza45940	Panhead screw, with thread locking compound **Application:** Rugged side panel to horizontal rail; not for area of tox-cold welded brackets and corner profiles except when guide rail is fitted to slot 1	Stainless steel	M4 x 14	100	24566-102
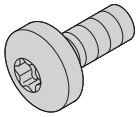 06712053	Panhead screw, with thread locking compound **Application:** Rugged side panel to horizontal rail; not for area of tox-cold welded brackets and corner profiles if guide rail is fitted to slot 1	Stainless steel	M4 x 10	100	24566-103
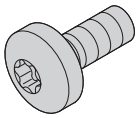 06712053	Panhead screw, with thread locking compound **Application:** Rugged side panel to cover plate, not for area of tox-cold welded brackets and corner profiles	Stainless steel	M4 x 8	100	24566-104
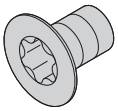 06708053	Torx countersunk screw , with thread locking compound **Application: :** Rugged side panel to cover plate, for area of tox-cold welded brackets and corner profiles	Stainless steel	M4 x 10	100	24566-106
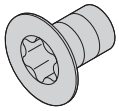 06708053	Torx countersunk screw, with thread locking compound **Application:** Rugged side panel to corner profile; in EMC-shielded subracks and to increase robustness	Stainless steel	M4 x 7	100	24566-105
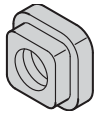 AZA45921	Square nut **Application:** Rugged side panel to corner profile; in EMC-shielded subracks and to increase robustness	Zinc-plated steel	M4	100	**24560-140**

Note

- Stainless steel screws; with organic surface layer (silver)

Subracks – europacPROrugged

Threaded inserts, perforated strips, insulation strips

Order Information

	Threaded insert			Perforated strip		Insulation strip	
	M2.5		M3	Item 1			
	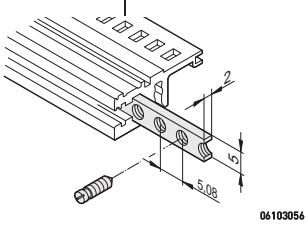 required for fixing the front panel to the horizontal rail; St, zinc-plated; use collar screw 12.3 mm, see page 6.66			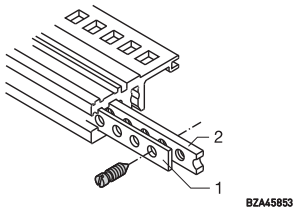 for centring shielded plug-in units, Al, 1 mm, please order grub screw separately		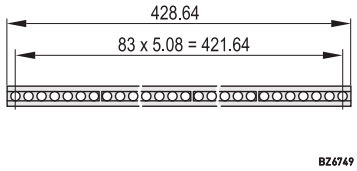 for insulated mounting of backplane; PBT UL 94 V-0, grey	
Usable length HP	Threaded insert Length mm	1 piece (SPQ 10)[1]	1 piece (SPQ 10)[1]	Perforated strip Length mm	1 piece (SPQ 10)[1]	Insulation strip Length mm	PU 10 pieces
20	106.18	**34561-320**	–	106.48	**30845-189**	101.50	**24560-820**
28	146.82	**34561-328**	–	147.12	**30845-197**	144.20	**24560-828**
40	207.78	**34561-340**	–	208.08	**30845-209**	205.12	**24560-840**
42	217.94	**34561-342**	–	218.24	**30845-211**	210.40	**24560-842**
63	324.62	**34561-363**	–	324.92	**30845-232**	316.88	**24560-863**
84	431.30	**34561-384**	**34561-484**	431.60	**30845-253**	428.64	**24560-884**
196	1000.26	**34565-196**	–	1000.26	**34565-396**		–

Accessories

Grub screw M2.5 x 8, PU 100 pieces	**21100-276**	–	–	–	–	–
Grub screw M2.5 x 9, PU 100 pieces	–	–	–	**21101-359**	–	–
Grub screw M3 x 8, PU 100 pieces	–	**21100-646**	–	–	–	–

1) SPQ (standard pack quantity): Part number includes 1 piece, but delivery is exclusively made in standard pack quantity (SPQ); please order at least the SPQ quantity or a multiple

Part no. includes one packing unit (PU); delivery is exclusively made in PU

19" dual fixing materials kit

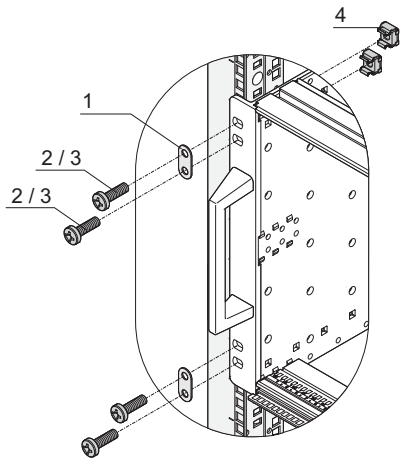

- For fixing a subrack with dual fixing holes to 19" mounting brackets (e.g. rugged and railroad subracks)

Delivery comprises

Item	Qty	Description
1	4	Double washer, stainless steel
2	8	M6 x 16 (Torx 30 drive)
3	8	M6 x 16 (Pozidrive)
4	8	Cage nut KM6
1	4	User manual

Order Information

Description	Part no.
19" dual fixing materials kit	**24566-109**

Subracks – europacPROrugged

Adaptor to accommodate conduction cooled assemblies (CCA)

Order Information

	Adaptor to accomodate conduction cooled assemblies (CCA) in subracks 06112022 Al die-cast, silver, can be screw-fixed, 0.8" pitch; suitable for heavy and rugged horizontal rails, incl. fixing material kit	
Board length mm	VPX PU 1 pair	CompactPCI PU 1 pair
160	24566-004	24566-005

2) Part no. includes one packing unit (PU); delivery is exclusively made in PU

Guide rails for plug-in units and frame type plug-in units, one-piece, groove width 2 mm and 2.5 mm

Order Information

Assembly Plastic guide rail - can be clipped into Al extruded horizontal rails - can be clipped into 1.5 mm thick plates Storage temperature from -40 °C ... 130 °C			For plug-in units and frame type plug-in units "Standard" 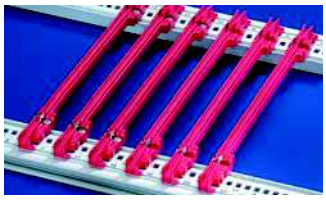 06102001	
Board length mm	Groove width mm	Colour mm	up to 220 mm length, PBT, UL 94 V-0; from 280 mm length, multi-piece, end piece PBT, UL 94 V-0, central section Al extrusion PU 10 pieces[2]	PBT, UL 94 V-0 1 piece (SPQ 50)[1]
70	2	red	–	**34579-230**
70	2	grey	–	**34579-231**
160	2	red	**24560-351**	**64560-001**
220	2	red	**24560-353**	**64560-002**
280	2	red	**24560-379**	–
340	2	red	**24560-380**	–
160	2.5	red	–	**64560-096**
220	2.5	red	–	**64560-098**

Accessories

Retention screw, PU 100 pieces; Torque max. 0.2 Nm 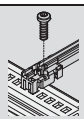	**24560-141**	**24560-141**
ESD clip, PU 50 pieces	**24560-255**	**24560-255**

1) SPQ (standard pack quantity): Part number includes 1 piece, but delivery is exclusively made in standard pack quantity (SPQ); please order at least the SPQ quantity or a multiple

2) Part no. includes one packing unit (PU); delivery is exclusively made in PU

Description of accessories see from page 6.107

Subracks – europacPROrugged ServicePLUS

Guide rails for heavy assemblies, CompactPCI, VME64x

Order Information

Assembly - can be clipped into Al extruded horizontal rails - can be clipped into1.5 mm thick plates Storage temperature from -40 °C ... 130 °C			For CompactPCI, VME64x with coding In accordance with IEEE 1101.10 and IEC 60297-3-103	Offset 0.1" for power supply units in accordance with IEEE 1101.10 and IEC 60297-3-103	For heavy modules, Al extrusion, silver, robust version
			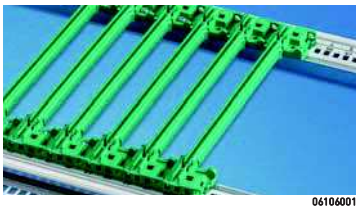 06106001	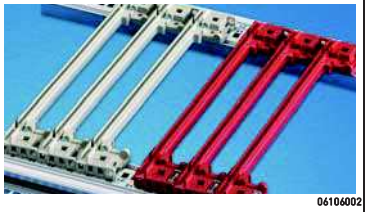 06106002	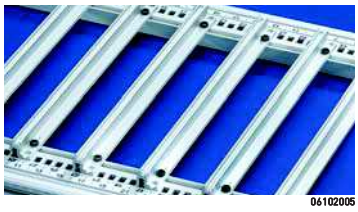 06102005
			One-piece for groove width 2 mm, PBT, UL 94 V-0; **multi-piece** for groove width 2.5 mm, end piece PBT, UL 94 V-0, middle section Al extrusion	PBT, UL 94 V-0, for installation of power supplies in CompactPCI systems or plug-in units with SMD placement	Al extrusion; is screwed to horizontal rail "heavy" with retention screws
Board length mm	**Groove width mm**	**Colour mm**	PU 10 pieces [2]	PU 10 pieces [2]	1 piece (SPQ 10)[1]
70	2	red	24560-355	–	–
70	2	grey	24560-360	–	–
160	2	red	24560-356	–	–
160	2	grey	24560-358	–	34562-881
160	2	green	–	24560-359	–
220	2	grey	–	–	34562-882
220	2	green	–	–	34562-883
160	2.5	grey	–	–	34564-881
220	2.5	red	24561-330	–	–
220	2.5	grey	24561-340	–	34564-882
280	2.5	red	24561-331	–	–
280	2.5	grey	24561-341	–	34564-883

Accessories

ESD clips, PU 50 pieces	24560-255	–	–
ESD clips, for alignment pin, PU 50 pieces	24560-256	24560-256	–
Retention screw, PU 100 pcs.; torque max. 0.2 Nm	24560-141	24560-141	24560-157
Coding peg, PU 100 pieces	20817-501	20817-501	–

1) SPQ (standard pack quantity): Order number includes 1 piece, but delivery is exclusively made in standard pack quantity (SPQ); please order at least the SPQ quantity or a multiple thereof

2) Order number includes one packaging unit (PU); delivery is exclusively made in PU

Description of accessories see from page 6.107

Subracks – europacPROrugged ServicePLUS

Guide rail accessories

Order Information

	ESD clips, CompactPCI/VME 64 alignment pin for guide rails	Coding for plug-in components Keying/coding for CompactPCI, VME64x handles to IEEE 1011.10 and IEC 60297-3-103
	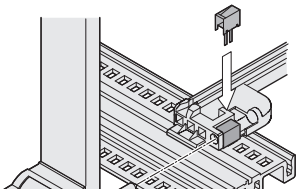 06103052	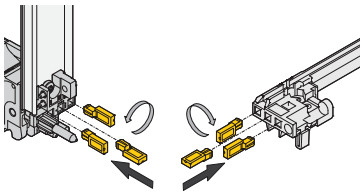 04612052
	Spring steel, tin-plated, ESD clip, for alignment pin in accordance with IEEE; can be plugged into the guide rails with coding and into the keying/coding block; provides conductive contact between the guide pin of the inserter/ extractor handle (IEL or IET handle) and the horizontal rail	Keying/coding peg, PBTP, UL 94 V-0, RAL 7035: The keying/coding pegs prevent plug-in units to be mounted in wrong slots. They are inserted in the chambers of the codable card guides as well as in the insertion/extraction handles IEL or IET (4 possible positions), resulting in 64 codings per card guide; when coding the upper and lower card guide, 4096 codings will result;
Assembly	PU 50 pieces [2]	PU 100 pieces [2]
At the top/ at the bottom	**24560-256**	**20817-501**

2) Part no. includes one packing unit (PU); delivery is exclusively made in PU

Guide rail accessories

Order Information

	ESD clip for guide rails
	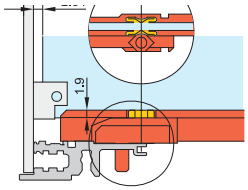 04503050
	Spring steel, tin-plated, ensures conductive contact between board and horizontal rail, on both the solder side and the component side
Colour	**silver**
Assembly	PU 50 pieces
above/below	**24560-255**

Subracks – europacPROrugged ServicePLUS

Cover plates for bolting to rugged side panel

Order Information

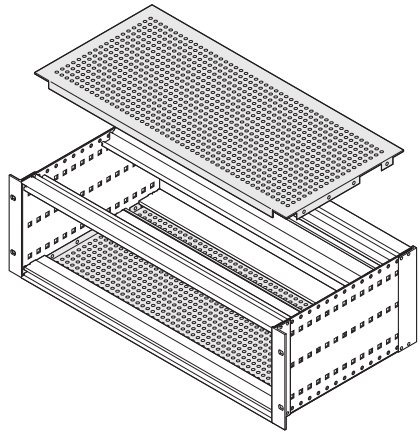

06197010

Cover plate for bolting to side panel

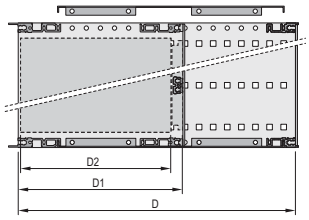

06112054

Perforated Al plate, 1.2 mm, hole diameter 4.0 mm, passivated, perforation ratio 58 %, incl. retention screws;

4 stainless steel EMC contact strips per subrack are required for shielding, please order separately

Stainless steel EMC gasket, between cover plate and horizontal rail

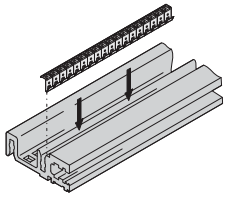

06106052

Stainless steel EMC gasket, clips into the horizontal rail and forms the contact with the cover plate; suitable for all horizontal rails

Width HP	Depth D mm	Application	PU 1 pair	PU 10 pieces	PU 100 pieces
84	175	160 mm board depth (D2)	24568-004	24560-245	24560-246
84	235	220 mm board depth (D2)	24568-008		
84	295	280 mm board depth (D2)	24568-012		
84	275	160 mm board depth (D2) CompactPCI, 80 mm rear I/O	24568-032		
84	277.75	160 mm board depth (D2) CompactPCI, 80 mm rear I/O	24568-036		
84	295	160 mm board depth (D2), approx. 120 mm clearance behind backplane	24568-016		
84	355	220 mm board depth (D2), approx. 120 mm clearance behind backplane	24568-020		

Accessories

Cover plate latch, additional securing for rugged cover plate, PU 4 pieces	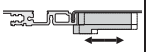	24566-007	–	–
Assembly tool, to fit EMC gasket, stainless steel, for horizontal rails, 1 piece	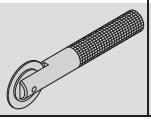	–	24560-271	24560-271

Note

- Cover plates without perforation available on request
- Mounting position of horizontal rails, see page 6.98

Subracks – europacPROrugged ServicePLUS

Combined mounting (6 U and 2 x 3 U one above the other)

Order Information

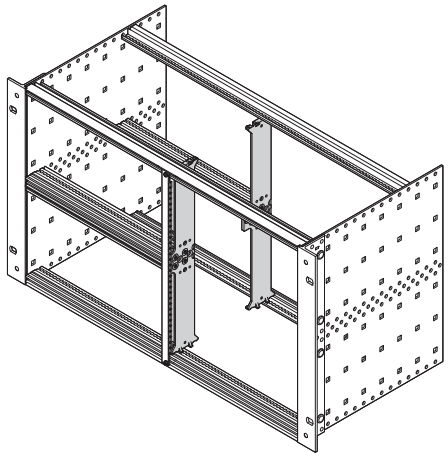 06112076	Rugged struts for combined mounting 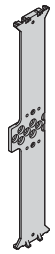 06112077 6 U, die-cast zinc; fixing material kit	Front panel for textile EMC gasket, 6 U, 2 HP Item 6 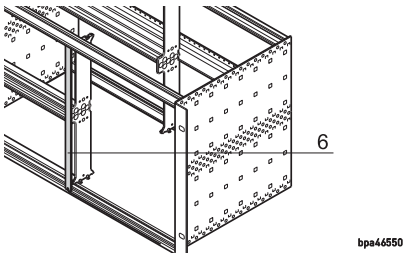 bpa46550 Al, 2.5 mm, U-profile with notch, 6 U, 2 HP
Height U	PU 2 pieces	1 piece (SPQ 5)[1)]
6	24566-400	**30849-140**

Accessories

Pozidrive/slotted collar screw M2.5 x 12.3, St, nickel-plated, PU 100 pieces	–	**21101-101**
Pozidrive/slotted collar screw M2.5, black, zinc-plated, PU 100 pieces	–	**21101-102**
Washer 2.7 x 5 x 1, PA 6, PU 100 pieces	–	**21101-121**
Textile gasket, core: foam, sleeve: textile cladding with CuNi coating, UL 94 V-0, PU 10 pieces	–	**21101-855**

Note

- Rugged horizontal rails in various lengths, see page 6.99

Subracks – europacPROrugged ServicePLUS

EMC gaskets between front/rear panel and horizontal rail

Order Information

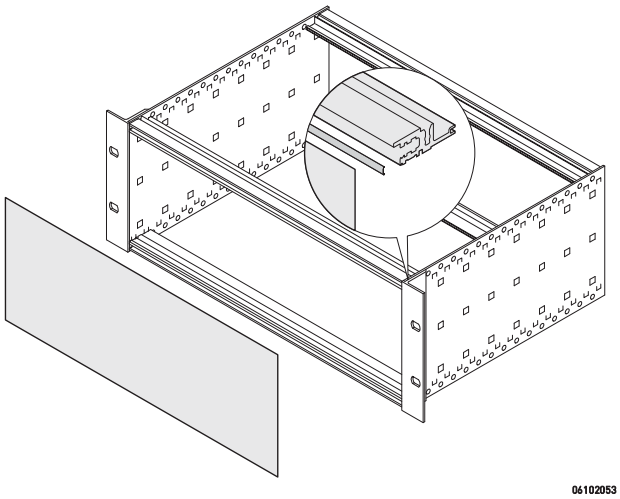

Stainless steel EMC gasket
between front panel/rear panel and horizontal rail

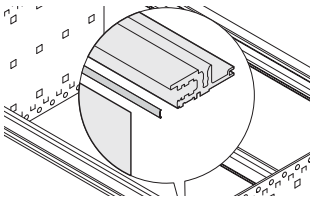

stainless steel; for front and rear horizontal rails (type VT)

Width HP	Depth mm	PU 10 pieces	PU 100 pieces
28	131.8	24560-229	–
42	202.9	24560-231	–
63	304.5	24560-233	–
84	416.6	24560-235	24560-236

EMC gaskets between front panel and 19" bracket/corner profile

Order Information

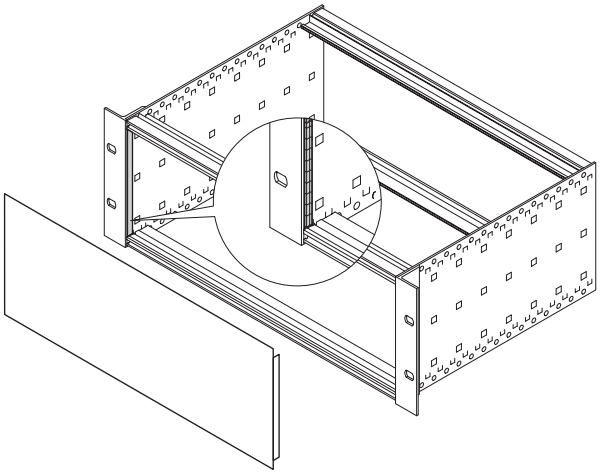

Textile EMC gasket
between front panel/rear panel and 19" bracket/corner profile

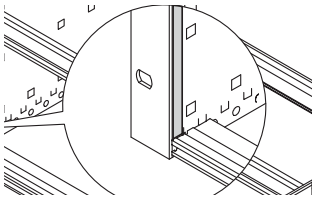

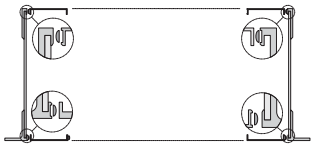

textile gasket,
core: foam,
sleeve: textile cladding with CuNi coating,
UL 94 V-0C

Height U	Depth mm	PU 10 pieces	PU 100 pieces
3	97.5	21101-853	21101-854
6	232.5	21101-855	21101-856

Subracks – europacPROrugged ServicePLUS

EMC gasket between horizontal rail and cover plate

Order Information

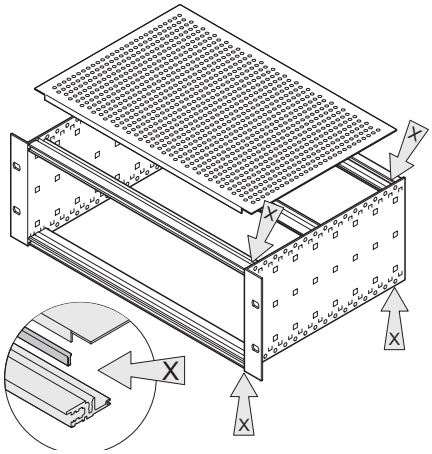

Stainless steel EMC gasket, between cover plate and horizontal rail

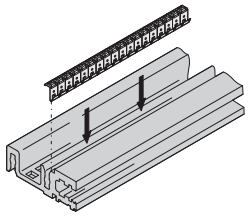

stainless steel EMC gasket,
clips into the horizontal rail and
forms the contact with the cover plate;
suitable for all horizontal rails

Width HP	Depth mm	PU 10 pieces	PU 100 pieces
42	202.9	**24560-241**	–
84	416.6	**24560-245**	**24560-246**
Assembly tool, to fit EMC gasket, stainless steel, for horizontal rails, 1 piece 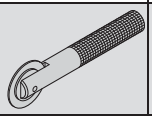		**24560-271**	**24560-271**

EMC gasket between backplane and side panel

Order Information

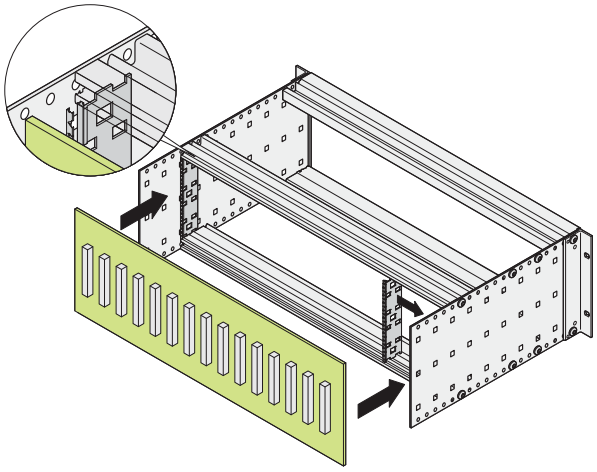

Stainless steel EMC gasket between backplane and side panel (depth-offset installation)

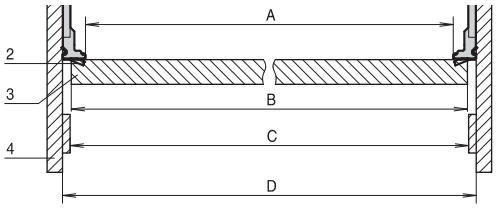

2 x support profile, Al extrusion, 2 x stainless steel EMC gasket;
for vertical EMC shielding between depth-offset shielded backplane and side panel:
dimensions for 84 HP
A = 425.8 mm, B < 429.9 mm, C = 429.8 mm, D = 431.8 mm

Height U	Depth mm	PU 1 kit
3	97.5	**24561-199**
6	187.5	**24561-499**
Torx countersunk screw M4 × 7, St, zinc-plated, PU 100 pieces		24566-105
Square nut M4, St, zinc-plated, PU 100 piece		**24560-140**

With appropriate design, the backplane can be used as shielded rear wall of the rack; in this case a rear horizontal rail (L-type VT or H-VT) must be used for deeper installation to ensure the horizontal contact.

For vertical contact the support profile can be fixed in the standard way to the europacPRO side panel (depth grid 30 mm